WECHAT
OFFICIAL ACCOUNT

WECHAT
MINI SITE

Guangdong GARIS Precision Hardware Technology CO.,LTD

ADD:No.2,Weibian Rd, Shujiu Village, changping Town, Dongguan City, Guangdong Province,CN

Http://www.garis.com.cn E-mail:info@garis.com.cn

GARIS CATALOG HINGE

2025

GARIS®格瑞斯

HOME
HARDWARE INNOVATION
DRIVER

GARIS® 格瑞斯

INTRODUCTION

Garis, founded in 2001, is a leading manufacturer of functional home hardware, offering diverse solutions for creative living spaces. As a top player in China's hardware industry, its products are sold in 72 countries, serving global custom home and cabinet manufacturers with high-quality solutions.

Garis, recognized as a national high-tech enterprise, upholds the corporate philosophy of "exploring the essence of things to acquire knowledge and pioneering innovation." Guided by the high-end market, the company is committed to independent innovation and research and development. With over 150 R&D experts and 1,500 employees, it operates three production bases (200,000 sqm total), a research center, and holds 100+ patents. Certified by ISO9001 and ISO14001, Garis uses smart production and digital management.

Garis provides end-to-end services from design to delivery, ensuring flexible, high-standard production to meet global clients' diverse and time-sensitive needs.

GARIS® 格瑞斯

PRODUCTION BASE

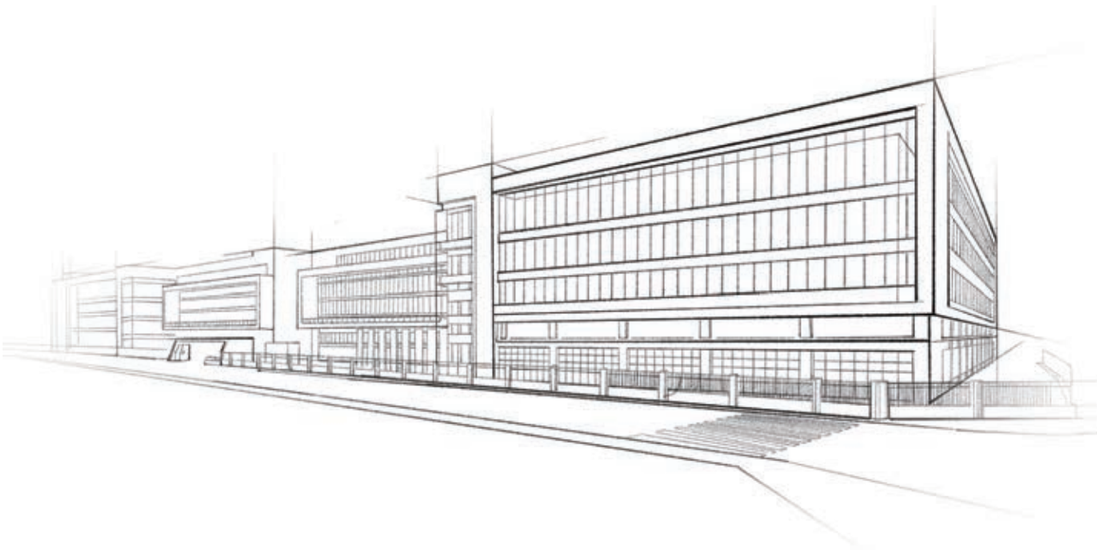

Garis Heyuan City Industrial Park 1

GARIS products thrive globally, driving production expansion. Since 2013, GARIS built facilities in Heyuan, Guangdong Province—Garis Lianping Industrial Park and Garis High-Tech Zone—totaling 200,000 sqm. Surrounded by nature environment, the zones exemplify "green production" and a "garden-style industrial park," with efficient transportation networks.

With over 20 years of growth, GARIS boasts a robust production system, featuring cutting-edge international equipment and advanced automated robotic lines. The company employs 150+ R&D experts and 1,500+ staff, using smart production and digital platforms across all stages—from raw material cutting to stamping, molding, injection molding, spraying, assembly, quality inspection, and product shipment.
Every step, from design to quality and performance, is meticulously managed, reducing energy use while boosting production output.

Garis Heyuan City Innovative Park 2

DEVELOPMENT HISTORY

发展历程

2001

GARIS was established, primarily producing home plastic and hardware accessories, with a factory area of 500 square meters.

2002

The company built a comprehensive domestic sales network and expanded into overseas markets, leading to rapid growth. The production area increased to 1,500 square meters.

2004

GARIS pioneered the domestic soft-closing drawer system and debuted at the Guangzhou International Hardware and Accessories Exhibition, quickly gaining widespread attention and acclaim from customers worldwide. This success laid a solid foundation for GARIS's future growth.

2005

GARIS's soft-closing drawer system is sold in 36 countries worldwide and has established strategic partnerships with renowned global cabinet manufacturers and hardware traders.

2006

Major modifications have been implemented for the soft-closing drawer system, alongside ongoing enhancements to refine the product's features and structural design.

2006

Major modifications have been implemented for the soft-closing drawer system, alongside ongoing enhancements to refine the product's features and structural design.

2007

The second-generation concealed soft-closing drawer system quickly dominated the market. The company expanded production into a 20,000㎡ facility, employed 300 staff, and achieved an annual output exceeding 100 million yuan.

2008

Venturing into the basket slide market and swiftly rising to prominence as a leading domestic basket manufacturer and top supplier for cabinet accessories, consistently securing a market share exceeding 80%.

2009

Garis Office Building was completed,equipped with A new R&D center and laboratory center, which were built to develop higher quality products and provide better services for global users.

2011

The new generation IN-BOX versatile drawer has been innovatively launched. A breakthrough in soft-closing slide technology has been achieved, developing its rails with a load-bearing capacity of 45KG/70KG.

2013

The ultra-thin, brand-new MINI-BOX optimized slim soft-closing drawer series has been successfully launched, alongside the release of a newly designed storage system.

2015

The Garis construction area of the Lianping factory in Heyuan City, is 60,000 square meters. Two fully automatic spraying production lines have been introduced, significantly doubling the production capacity of drawers.

2017

Soft-closing technology has achieved a major breakthrough. The innovative stepless variable soft-closing technology enables smoother sliding and softer closing.

2019

The G2 and G6 concealed slides, along with the METAL-BOX ultra-thin drawers, have been simultaneously launched, providing enhanced options for diverse home space solutions.

2021

The 13MM ultra-slim borderless U-BOX soft-closing drawer series, seamlessly aligned with modern aesthetic design, debuts innovatively. With a groundbreaking breakthrough in concealed slide performance and sychronization, it ensures precise and smooth sliding, offering versatile solutions for diverse home spaces.

2022

The 13MM ultra-slim borderless U-BOX soft-closing drawer series, seamlessly aligned with modern aesthetic design, debuts innovatively. With a groundbreaking breakthrough in concealed slide performance and sychronization, it ensures precise and smooth sliding, offering versatile solutions for diverse home spaces.

2025

The all-new N Series and R Series soft-closing drawers have made a powerful debut, collaborating to revolutionize the drawer divider storage solutions and ushering in a new era for the high-end custom home hardware industry.

DOMESTIC SALES NETWORK

Garis International Hardware Produce Co.,Ltd. is the earliest domestic professional manufacturer that independently research, produce and sell cabinet furniture soft-closing drawer slides, basket soft-closing slides, and concealed silent slides, hinge and other function hardware. Garis is the pioneer of China soft-closing drawer technology development.

GLOBAL SALES NETWORK

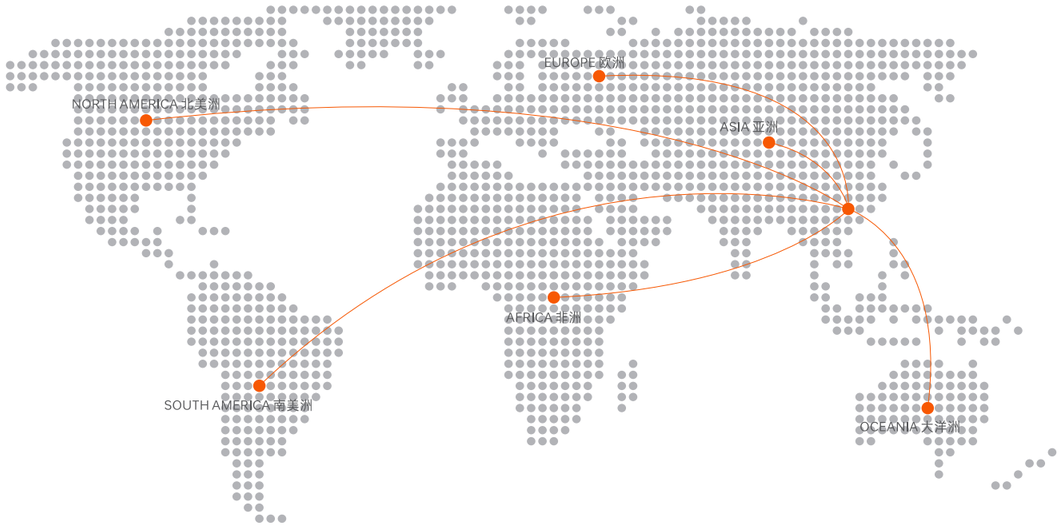

ASIA 亚洲

IN	印度	New Delhi	新德里
IL	以色列	Jerusalem	耶路撒冷
KR	韩国	Seoul	首爾
CN	中国	Beijing	北京
BL	巴勒斯坦		
KW	科威特	Kuwait City	科威特城
AE	阿拉伯联合酋长国	Riyadh	利雅德
MY	马来西亚	Kuala Lumpur	吉隆坡
VN	越南	Hanoi	河内
PK	巴基斯坦	islamabad	伊斯蘭馬巴德
TH	泰国	Bangkok	曼谷
IR	伊朗	Tehran	德黑蘭
NP	尼泊尔	Kathmandu	加德滿都
ID	印度尼西亚	Jakarta	雅加達
SG	新加坡	Singapore City	新加坡市
HK	中国香港		
JP	日本	Tokyo	东京
MN	蒙古	Ulaanbaatar	乌兰巴托
LB	黎巴嫩	Beirut	贝鲁特

EUROPE 欧洲

ES	西班牙	Madrid	馬德里
PL	波兰	Warsaw	華沙
IE	爱尔兰	Dublin	都柏林
GB	英国	London	倫敦
PT	葡萄牙	Lisbon	里斯本
GR	希腊	Athens	雅典
SI	斯洛文尼亚	Ljubljana	盧布爾雅那
UA	乌克兰	Kiev	基輔
SK	斯洛伐克	Bratislava	布拉提斯拉瓦
CZ	捷克	Prague	布拉格
MD	摩尔多瓦	Chisinau	基希訥烏
IT	意大利	Rome	罗马
DE	德国	Berlin	柏林
TR	土耳其	Ankara	安卡拉
RS	塞尔维亚	Belgrade	贝尔格莱德
BU	保加利亚	Sofia	索非亚
FR	法国	Paris	巴黎
RF	俄罗斯	Moscow	莫斯科

AFRICA 非洲

TN	突尼斯	Tunis	突尼斯市
MA	摩洛哥	Rabat	拉巴特
ZA	南非	Pretoria	比勒陀利亚

SOUTH AMERICA 南美洲

BR	巴西	Brasilia	巴西利亞
CL	智利	San Diego	聖地牙哥
AR	阿根廷	Buenos Aires	布宜诺斯艾利斯

OCEANIA 大洋洲

AU	澳大利亚	Canberra	坎培拉
NZ	新西兰	Wellington	威靈頓

NORTH AMERICA 北美洲

US	美国	Washington	华盛顿
CA	加拿大	Ottawa	渥太華

PRODUCT CATALOG

GARIS 格瑞斯

HINGE SERIES
KC89 001

KC89 Soft closing / KCF89 P2O Hinge
Quick-install 3D (Eccentric) Adjustment 013
Quick-install 015
Slide-On 017
Fix-On 019

KL89 Soft closing / KLF89 P2O Hinge
Quick-install 3D (Eccentric) Adjustment 021
Quick-install 023
Slide-On 025
Fix-On 027

LINEAR HINGE SERIES
KC90L 029

KC90L Soft closing / KCF90L P2O Hinge
Fix-On 3D 037

KL90L Soft closing / KLF90L P2O Hinge
Fix-On 3D 039

SMALL-ANGLE SOFT-CLOSE HINGE SERIES
KT72 043

KT72 Hinge
3D ADJUSTMENT 049
Clip-on 051
Fix-on 053

KL72 Hinge
3D ADJUSTMENT 055
Clip-on 057
Fix-on 059

ROLLER SOFT-CLOSE HINGE SERIES
KT68 061

KT68 Hinge
3D ADJUSTMENT 067
Clip-on 069
Fix-on 071

KL68 Hinge
3D ADJUSTMENT 073
Clip-on 075
Fix-on 077

UNIVERSAL SOFT-CLOSING HINGE SERIES FOR THICK/THIN DOOR PANEL
KC76 079

KC76 Hinge
3D ADJUSTMENT 083
Clip-on 085
Fix-on 087

STAINLESS STEELS SOFT -CLOSING HINGE SERIES
KS201 089

KS201 Stainless Steels Hinge
3D ADJUSTMENT 093
Clip-on 095
Fix-on 097

STAINLESS STEELS SOFT -CLOSING HINGE SERIES
KS304 099

KS304 Stainless Steels Hinge
3D ADJUSTMENT 103
Clip-on 105
Fix-on 107

SPECIAL DEGREE SOFT -CLOSING HINGE SERIES
GT 109

GT Special Degree Hinge
GT165 113
GT135 115
GT90 117
GT45 119

TOUCH LATCH SERIES 123

TOUCH LATCH DEVICE
KJ-K207-50N 125
KJ20-052-40N 127
KJ20-022-30N 129
GR-2201-20N 131

KC89

HINGE SERIES

INVISIBLE DANCE | THE POETIC NARRATIVE OF A LINEAR HINGE

With a minimalist line,
it carves through the fissures of space and time.
Within its metal skeleton lies the philosophy of
ten thousand silent openings and closings
——
unassuming,yet resonates with a quiet eloquence.

Linear hinge,
The preferred hardware component for minimalist home designs,
seamlessly integrating with styles ranging from
pure simplicity to understated luxury

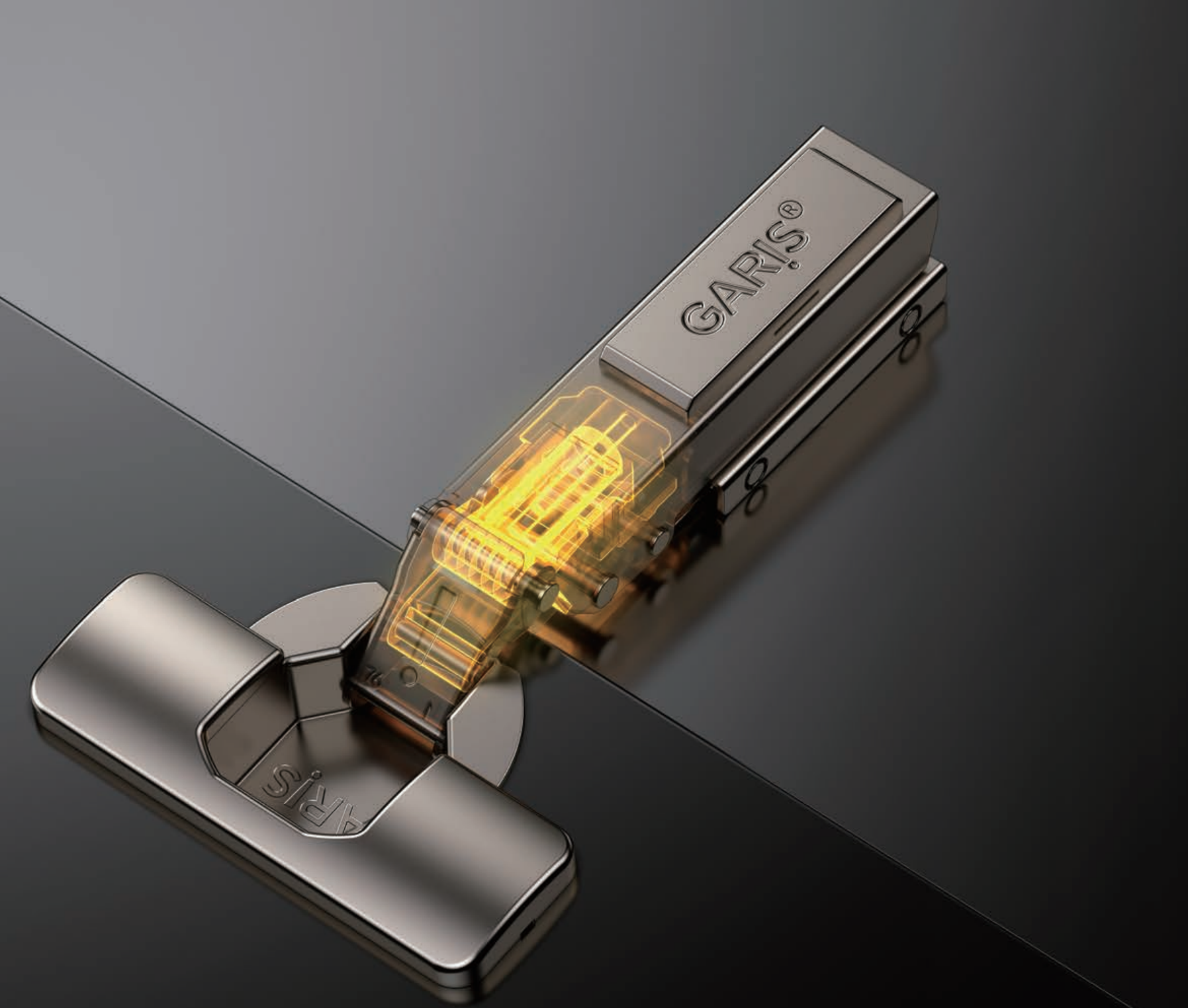

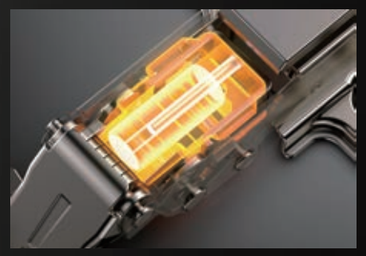

• Built-in small-angle two-stage damper mechanism ensures a gentle, smooth, and silent closing experience.

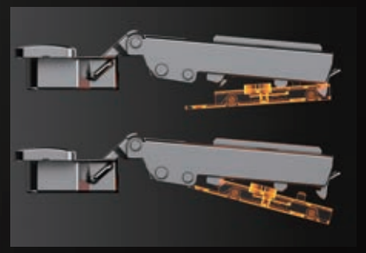

• Innovative patented structure with front/back reversible quick-installation technology delivers efficient and convenient operation.

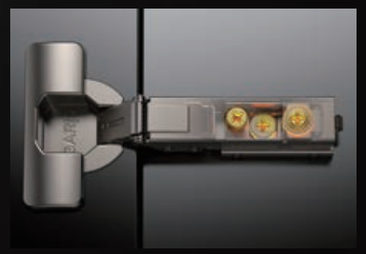

• Minimalist design enhanced by a linear base featuring 3D adjustment capabilities, elevating simplicity to new heights.

• When the cabinet door is closed to the small-angle soft-closing position, the hinge provides soft-closing functionality at any angle.

The soft-close mechanism utilizes a hydraulic damper to enable gentle cabinet door closure, effectively reducing noise, preventing wear-and-tear damage, and enhancing operational safety.

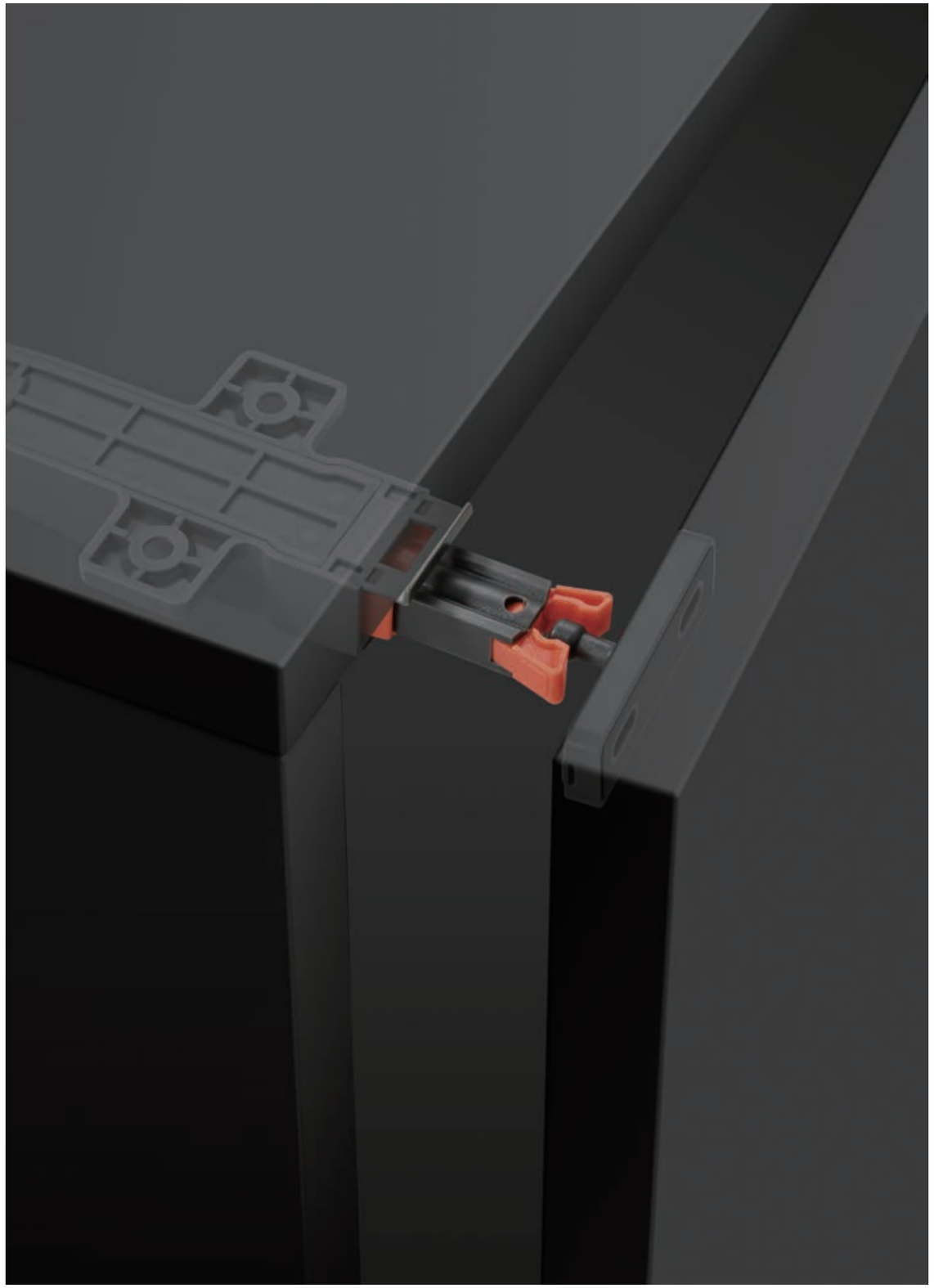

76
GARIS®

GARIS®

GARIS® 格瑞斯

Multiple electroplating processes with copper and nickel plating, dual-layer protection for worry-free rust-proofing.

Supports various base models to meet diverse needs:

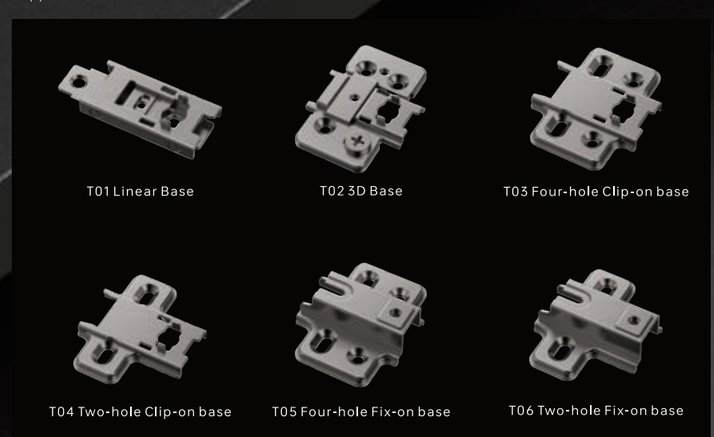

KC89 Soft closing / KCF89 P2O Hinge

Quick-install 3D (Eccentric) Adjustment

Product Introduction

Hinge Cup Depth: 11.5mm
Opening Angle: 95°±3°
Quick-installation Base
Door (K) Dimensions: 3-7mm, Applicable Door Thickness15-28mm
Soft-close 0°buffer
6mm Depth Adjustment, 5mm Horizontal Adjustment

Standard Configuration

S01
8 Woodworking Screws
M4x16mm

2 Pieces
Soft closing/P2O Hinge

KC89 SOFT CLOSING DETAILS QR CODE

KCF89 P2O DETAILS QR CODE

Product information

Soft Close	P2O	Soft Close	P2O	Soft Close	P2O
KC89-293(A)	KCF89-293(A)	KC89-283(A)	KCF89-283(A)	KC89-273(A)	KCF89-273(A)
Full Overlay	Full Overlay	Half Overlay	Half Overlay	Inset	Inset

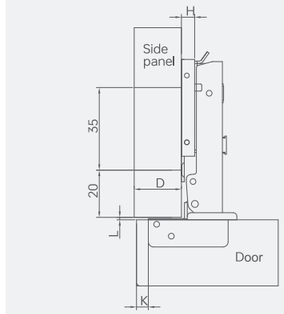

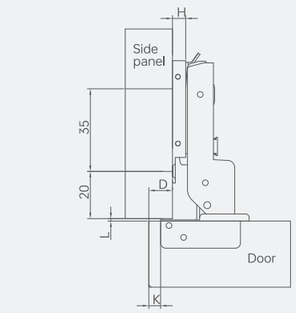

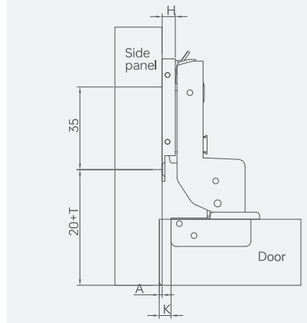

H=14+K-D

D \ K / H	3	4	5	6	7
0	17	18	19	20	21

H=5+K-D

D \ K / H	3	4	5	6	7
0	8	9	10	11	12

H=-4+K+A

A \ K / H	3	4	5	6	7
0	1	0	-1	-2	-3

Required accessories (A) indicates required accessories

T01
Linear Base

T02
3D Base

T03
Four-hole Clip-on base

T04
Two-hole Clip-on base

Optional accessories

N01
Decorative arm cover

G02
Hinge cup cover

S02
Woodworking screw
M4x14mm

KC89 Soft closing / KCF89 P2O Hinge

Clip-on

Product Introduction

Hinge Cup Depth：11.5mm
Opening Angle：95°±3°
Quick-installation Base
Door (K) Dimensions：3-7mm，Applicable Door Thickness15-28mm
Soft-close 0°buffer
6mm Depth Adjustment, 5mm Horizontal Adjustment

Standard Configuration

S01
12 Woodworking Screws
M4x16mm

2 Pieces
Soft closing/P2O Hinge

KC89 SOFT CLOSING DETAILS QR CODE

KCF89 P2O DETAILS QR CODE

Product information

Soft Close	P2O
KC89-292(A) Full Overlay	KCF89-292(A) Full Overlay

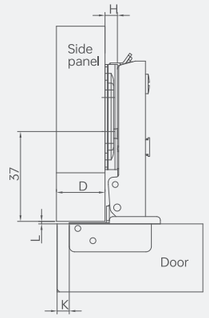

H=14+K-D

D \ K / H	3	4	5	6	7
0	17	18	19	20	21

Soft Close	P2O
KC89-282(A) Half Overlay	KCF89-282(A) Half Overlay

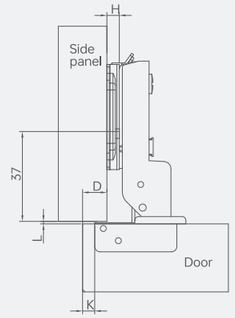

H=5+K-D

D \ K / H	3	4	5	6	7
0	8	9	10	11	12

Soft Close	P2O
KC89-272(A) Inset	KCF89-272(A) Inset

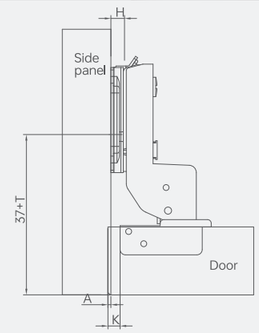

H=-4+K+A

A \ K / H	3	4	5	6	7
0	1	0	-1	-2	-3

Required accessories (A) indicates required accessories

T01
Linear Base

T02
3D Base

T03
Four-hole Clip-on base

T04
Two-hole Clip-on base

Optional accessories

N01
Decorative arm cover

G02
Hinge cup cover

S02
Woodworking screw
M4x14mm

KC89 Soft closing / KCF89 P2O Hinge

Slide-on

Product Introduction

Hinge Cup Depth：11.5mm
Opening Angle：95°±3°
Door (K) Dimensions：3-7mm，Applicable Door Thickness15-28mm
Soft-close 0°buffer
6mm Depth Adjustment, 5mm Horizontal Adjustment

Standard Configuration

S01
8 Woodworking Screws
M4x16mm

2 Pieces
Soft closing/P2O Hinge

KC89 SOFT CLOSING DETAILS QR CODE

KCF89 P2O DETAILS QR CODE

Product information

Soft Close	P2O
KC89-294(A) Full Overlay	KCF89-294(A) Full Overlay

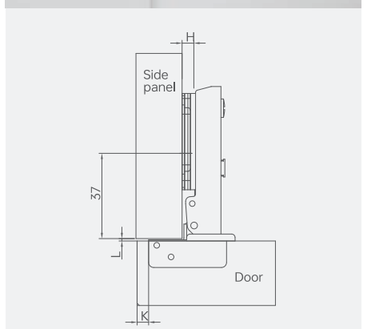

H=14+K-D

D \ K / H	3	4	5	6	7
0	17	18	19	20	21

Soft Close	P2O
KC89-284(A) Half Overlay	KCF89-284(A) Half Overlay

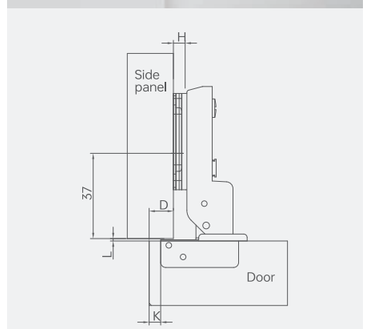

H=5+K-D

D \ K / H	3	4	5	6	7
0	8	9	10	11	12

Soft Close	P2O
KC89-274(A) Inset	KCF89-274(A) Inset

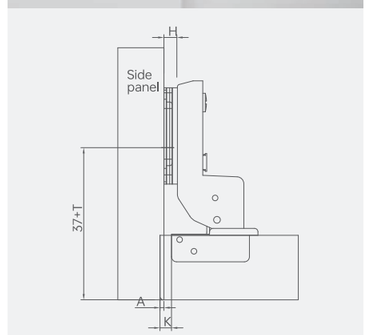

H=-4+K+A

A \ K / H	3	4	5	6	7
0	1	0	-1	-2	-3

Required accessories (A) indicates required accessories

T05
Four-hole Fix-on base

T06
Two-hole Fix-on base

Optional accessories

N01
Decorative arm cover

G02
Hinge cup cover

S02
Woodworking screw
M4x14mm

KC89 Soft closing / KCF89 P2O Hinge

Fix-on

Product Introduction

Hinge Cup Depth：11.5mm
Opening Angle：95°±3°
Door (K) Dimensions：3-7mm，Applicable Door Thickness15-28mm
Soft-close 0°buffer
6mm Depth Adjustment, 5mm Horizontal Adjustment

Standard Configuration

S01
12 Woodworking Screws
M4x16mm

2 Pieces
Soft closing/P2O Hinge

KC89 SOFT CLOSING DETAILS QR CODE

KCF89 P2O DETAILS QR CODE

Product information

Soft Close	P2O	Soft Close	P2O	Soft Close	P2O
KC89-291(A)	KCF89-291(A)	KC89-281(A)	KCF89-281(A)	KC89-271(A)	KCF89-271(A)
Full Overlay	Full Overlay	Half Overlay	Half Overlay	Inset	Inset

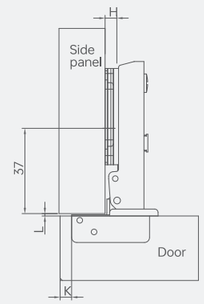

H=14+K-D

D \ H	K	3	4	5	6	7
0		17	18	19	20	21

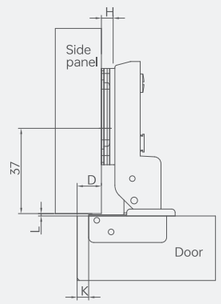

H=5+K-D

D \ H	K	3	4	5	6	7
0		8	9	10	11	12

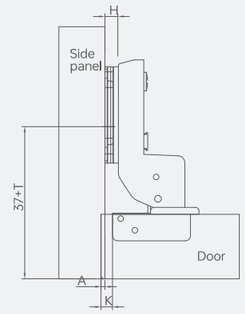

H=-4+K+A

A \ H	K	3	4	5	6	7
0		1	0	-1	-2	-3

Required accessories (A) indicates required accessories

T05
Four-hole Fix-on base

T06
Two-hole Fix-on base

Optional accessories

N01
Decorative arm cover

G02
Hinge cup cover

S02
Woodworking screw
M4x14mm

KL89 Soft closing / KLF89 P2O Hinge

Quick-install 3D (Eccentric) Adjustment

Product Introduction

Hinge Cup Depth: 9.7mm
Opening Angle: 95°±3°
Quick-installation Base
Drilling dimensions for aluminum frame hinge cups: 28mm
For aluminum profiles, the (P) width can be selected: 19-23mm
Soft-close 0°buffer
6mm Depth Adjustment, 5mm Horizontal Adjustment

Standard Configuration

S01
4 Woodworking Screws
M4x16mm

S05
4 flat head screws
4x8mm

2 Pieces
Soft closing/P2O Hinge

KL89 SOFT CLOSING DETAILS QR CODE

KLF89 P2O DETAILS QR CODE

Product information

Soft Close	P2O
KL89-293(A) Full Overlay	KLF89-293(A) Full Overlay

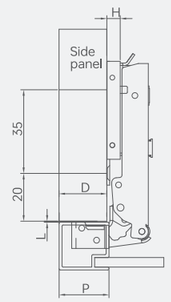

H=P-1-D

D / H \ P	19	20	21	22	23
0	18	19	20	21	22

Soft Close	P2O
KL89-283(A) Half Overlay	KLF89-283(A) Half Overlay

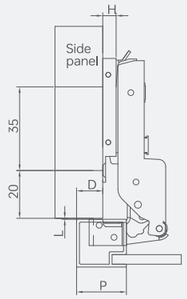

H=P-10-D

D / H \ P	19	20	21	22	23
0	9	10	11	12	13

Soft Close	P2O
KL89-273(A) Inset	KLF89-273(A) Inset

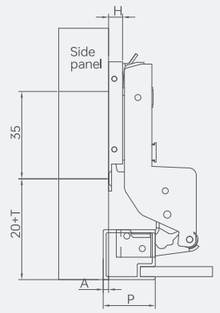

H=P-19+A

A / H \ P	19	20	21	22	23
0	0	-1	-2	-3	-4

Required accessories (A) indicates required accessories

T01
Linear Base

T02
3D Base

T03
Four-hole Clip-on base

T04
Two-hole Clip-on base

Optional accessories

N01
Decorative arm cover

S02
Woodworking screw
M4x14mm

KL89 Soft closing / KLF89 P2O Hinge

Clip-on

Product Introduction

Hinge Cup Depth: 9.7mm
Opening Angle: 95°±3°
Quick-installation Base
Drilling dimensions for aluminum frame hinge cups: 28mm
For aluminum profiles, the (P) width can be selected: 19-23mm
Soft-close 0°buffer
6mm Depth Adjustment, 5mm Horizontal Adjustment

Standard Configuration

S01
8 Woodworking Screws
M4x16mm

S05
4 flat head screws
4x8mm

2 Pieces
Soft closing/P2O Hinge

KL89 SOFT CLOSING DETAILS QR CODE

KLF89 P2O DETAILS QR CODE

Product information

Soft Close	P2O
KL89-292(A) Full Overlay	KLF89-292(A) Full Overlay

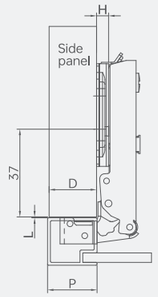

H=P-1-D

D \ H \ P	19	20	21	22	23
0	18	19	20	21	22

Soft Close	P2O
KL89-282(A) Half Overlay	KLF89-282(A) Half Overlay

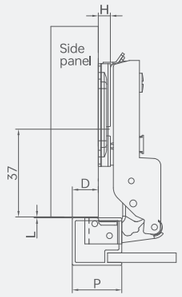

H=P-10-D

D \ H \ P	19	20	21	22	23
0	9	10	11	12	13

Soft Close	P2O
KL89-272(A) Inset	KLF89-272(A) Inset

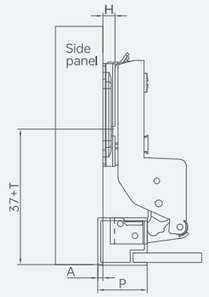

H=P-19+A

A \ H \ P	19	20	21	22	23
0	0	-1	-2	-3	-4

Required accessories (A) indicates required accessories

T01
Linear Base

T02
3D Base

T03
Four-hole Clip-on base

T04
Two-hole Clip-on base

Optional accessories

N01
Decorative arm cover

S02
Woodworking screw
M4x14mm

KL89 Soft closing / KLF89 P2O Hinge

Slide-on

Product Introduction

Hinge Cup Depth: 9.7mm
Opening Angle: 95°±3°
Drilling dimensions for aluminum frame hinge cups: 28mm
For aluminum profiles, the (P) width can be selected: 19-23mm
Soft-close 0°buffer
6mm Depth Adjustment, 5mm Horizontal Adjustment

Standard Configuration

S01
4 Woodworking Screws
M4x16mm

S05
4 flat head screws
4x8mm

2 Pieces
Soft closing/P2O Hinge

KL89 SOFT CLOSING DETAILS QR CODE

KLF89 P2O DETAILS QR CODE

Product information

Soft Close
KL89-294(A)
Full Overlay

P2O
KLF89-294(A)
Full Overlay

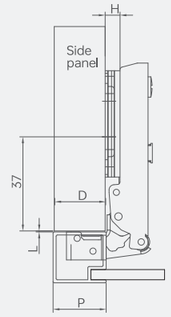

H=P-1-D

D \ H \ P	19	20	21	22	23
0	18	19	20	21	22

Soft Close
KL89-284(A)
Half Overlay

P2O
KLF89-284(A)
Half Overlay

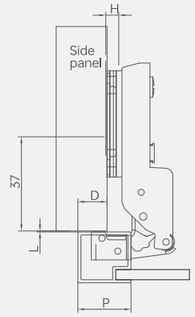

H=P-10-D

D \ H \ P	19	20	21	22	23
0	9	10	11	12	13

Soft Close
KL89-274(A)
Inset

P2O
KLF89-274(A)
Inset

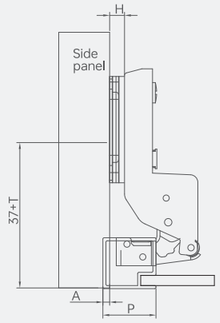

H=P-19+A

A \ H \ P	19	20	21	22	23
0	0	-1	-2	-3	-4

Required accessories (A) indicates required accessories

T05
Four-hole Fix-on base

T06
Two-hole Fix-on base

Optional accessories

N01
Decorative arm cover

S02
Woodworking screw
M4x14mm

KL89 Soft closing / KLF89 P2O Hinge

Fix-on

Product Introduction

Hinge Cup Depth: 9.7mm
Opening Angle: 95°±3°
Drilling dimensions for aluminum frame hinge cups: 28mm
For aluminum profiles, the (P) width can be selected: 19-23mm
Soft-close 0°buffer
6mm Depth Adjustment, 5mm Horizontal Adjustment

Standard Configuration

S01
8 Woodworking Screws
M4x16mm

S05
4 flat head screws
4x8mm

KL89 SOFT CLOSING DETAILS QR CODE

KLF89 P2O DETAILS QR CODE

2 Pieces
Soft closing/P2O Hinge

Product information

Soft Close	P2O
KL89-291(A) Full Overlay	KLF89-291(A) Full Overlay

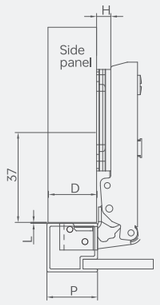

H=P-1-D

D \ P / H	19	20	21	22	23
0	18	19	20	21	22

Soft Close	P2O
KL89-281(A) Half Overlay	KLF89-281(A) Half Overlay

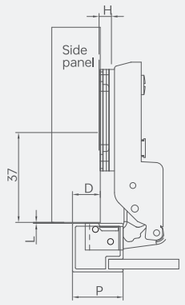

H=P-10-D

D \ P / H	19	20	21	22	23
0	9	10	11	12	13

Soft Close	P2O
KL89-271(A) Inset	KLF89-271(A) Inset

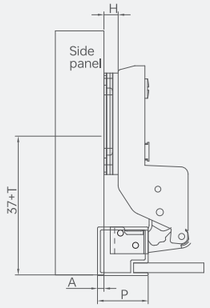

H=P-19+A

A \ P / H	19	20	21	22	23
0	0	-1	-2	-3	-4

Required accessories (A) indicates required accessories

T05
Four-hole Fix-on base

T06
Two-hole Fix-on base

Optional accessories

N01
Decorative arm cover

S02
Woodworking screw
M4x14mm

KC90L

LINEAR HINGE SERIES

Epic hidden in the details

Tempering the cold steel,
Giving it silky obedience,
Using millimeter-level humility,
Lifting tons of trust.
Every rotation is a dance with gravity,
Every inch of wear and tear is engraved
with the secret words of time.

Linear hinge
Simple design,
Hidden installation,
Both appearance and function

GARIS® 格瑞斯

• Built-in small-angle two- stage damper mechanism ensures a gentle, smooth, and silent closing experience.

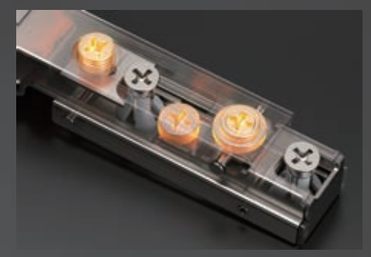

• Minimalist design enhanced by a linear base featuring 3D adjustment capabilities, elevating simplicity to new heights.

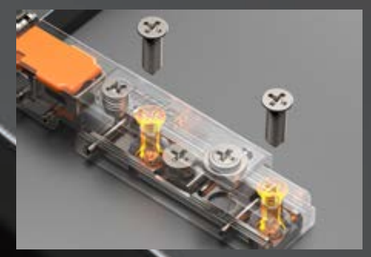

• Integrated screw-mounted design for easy and quick installation.

• P2O function

GARIS® 格瑞斯

FINELY CRAFTED
HONEY LIQUEUR
BLENDED WITH JACK DANIEL'S
TENNESSEE WHISKEY
35% ALC BY VOL. (70 PROOF)
QUALITY
76
GARIS®

KC90L Soft closing / KCF90L P2O Hinge

Fix-on 3D

Product Introduction

Hinge Cup Depth: 11.5mm
Opening Angle: 95°±3°
3D Adjustable
Door (K) Dimensions: 3-7mm
Applicable Door Thickness15-28mm
Soft-close 0°buffer
6mm Depth Adjustment, 5mm Horizontal Adjustment

Standard Configuration

S01
8 Woodworking Screws
M4x16mm

2 Pieces
Soft closing/P2O Hinge

KC90L SOFT CLOSING DETAILS QR CODE

KCF90L P2O DETAILS QR CODE

Product information

Soft Close
KC90L-293
FULL OVERLAY

P2O
KCF90L-293
FULL OVERLAY

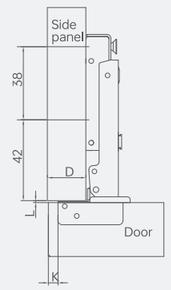

H=14+K-D

D \ K / H	3	4	5	6	7
0	17	18	19	20	21

Soft Close
KC90L-283
Half Overlay

P2O
KCF90L-283
Half Overlay

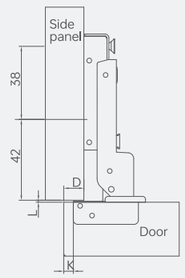

H=5+K-D

D \ K / H	3	4	5	6	7
0	8	9	10	11	12

Soft Close
KC90L-273
Inset

P2O
KCF90L-273
Inset

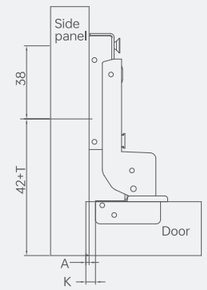

H=-4+K+A

A \ K / H	3	4	5	6	7
0	1	0	-1	-2	-3

Optional accessories

N02
Decorative arm cover

G02
Hinge cup cover

S02
Woodworking screw
M4x14mm

KL90L Soft closing / KLF90L P2O Hinge

Fix-on 3D

Product Introduction

Hinge Cup Depth: 9.7mm
Opening Angle: 95°±3°
3D Adjustable
Drilling dimensions for aluminum frame hinge cups: 28mm
For aluminum profiles, the (P) width can be selected: 19-23mm
Soft-close 0°buffer
6mm Depth Adjustment, 5mm Horizontal Adjustment

Standard Configuration

S01
4 Woodworking Screws
M4x16mm

S05
4 flat head screws
4x8mm

2 Pieces
Soft closing/P2O Hinge

KL90L SOFT CLOSING DETAILS QR CODE

KLF90L P2O DETAILS QR CODE

Product information

Soft Close	P2O
KL90L-293 FULL OVERLAY	KLF90L-293 FULL OVERLAY

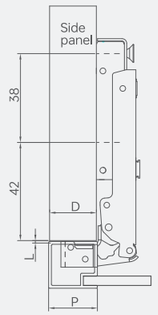

H=P-1-D

D \ P / H	19	20	21	22	23
0	18	19	20	21	22

Soft Close	P2O
KL90L-283 Half Overlay	KLF90L-283 Half Overlay

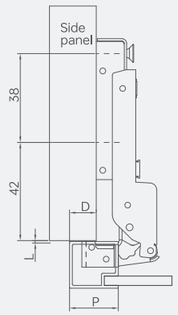

H=P-10-D

D \ P / H	19	20	21	22	23
0	9	10	11	12	13

Soft Close	P2O
KL90L-273 Inset	KLF90L-273 Inset

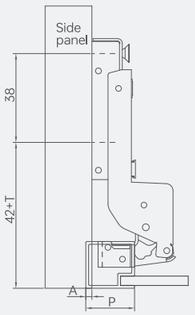

H=P-19+A

A \ P / H	19	20	21	22	23
0	0	-1	-2	-3	-4

Optional accessories

N02
Decorative arm cover

S02
Woodworking screw
M4x14mm

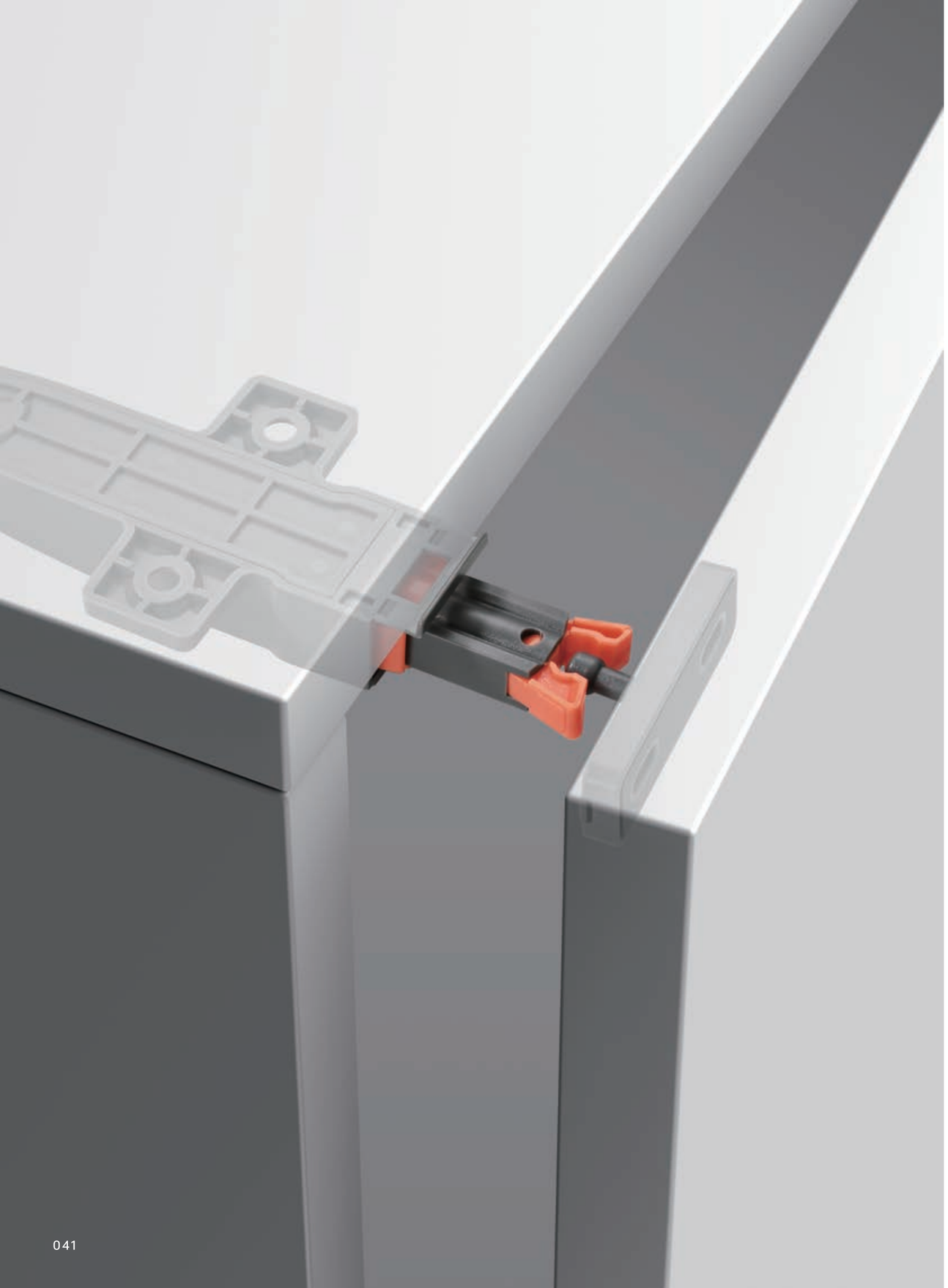

TOUCH LATCH DEVICE

KJ-K207-50N

Product Introduction

Model: KJ-K207-50N
Material: Plastic
Color: Dark Gray
Unit Weight: 20g
Carton Dimensions: 53×27×30cm (L×W×H)
Quantity: 500 pieces/carton
Force Options: 30N / 40N

Included Accessories

Clip

Screws

KJ-K207-50N
DETAILS QR CODE

Product information

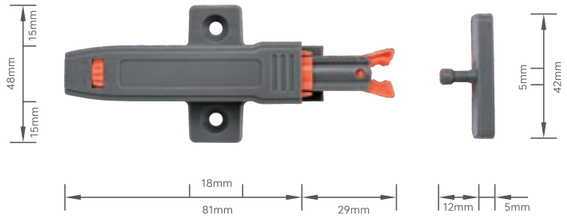

Installation Guide

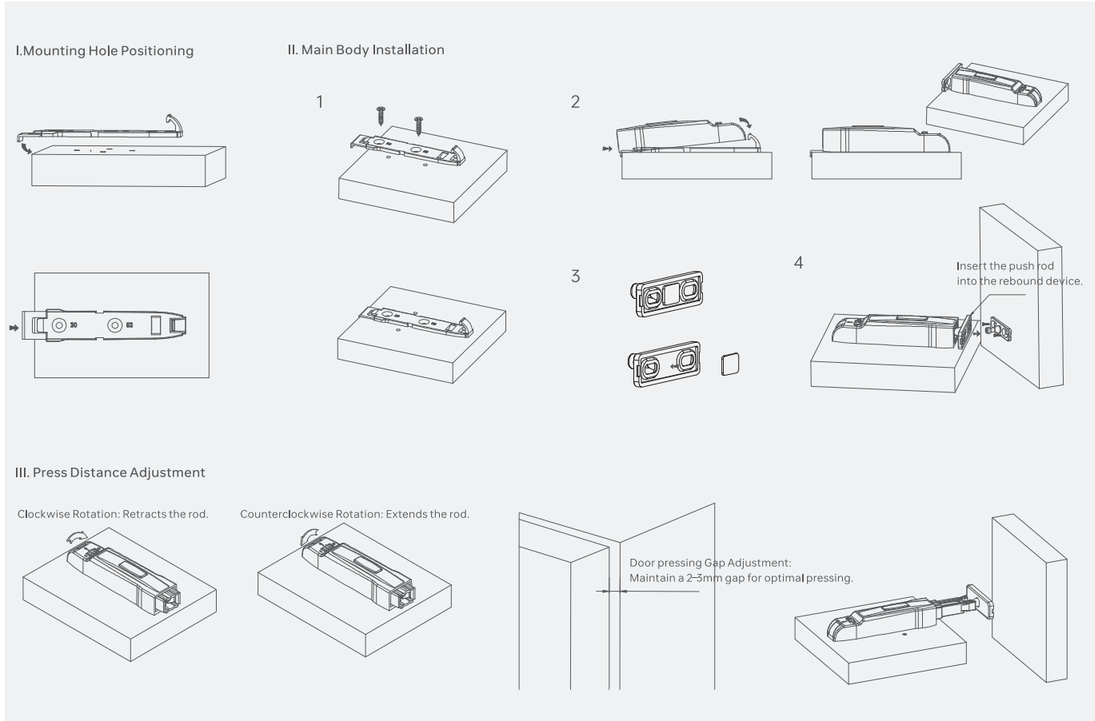

Note: All dimensions are manually measured and may have slight variances. Refer to the physical product for accuracy.

KT72

SMALL-ANGLE SOFT-CLOSE HINGE SERIES

The Silent Guardian

When doors open gently, abrupt noises vanish,
leaving only silky-smooth motion.
With refined damping technology,
the small-angle soft-close hinge tenderly embraces every touch,
infusing every moment at home with tranquility.
Like a quiet guardian,
it silently preserves harmony and peace in your living space.

When the door panel is opened to a preset small angle, the internal soft-closing mechanism of the hinge activates, allowing the door to close slowly, effectively reducing noise and protecting the door from impact damage.

GARIS®

GARIS®

KT72 Hinge

3D Adjustment

Product Specifications

Hinge Cup Depth: 11.5mm
Opening Angle: 102±3°
3D adjustable, quick-release base compatible
Door Panel (K) Thickness: 3–7mm (total usable door thickness: 15–22mm)
Soft-close activation at ≤5°
Sturdy Anti-Shock Design:
Depth adjustment: 6.6mm
Horizontal adjustment: 5mm

Standard Configuration

S01
10x wood screws
M4x16mm

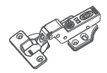

2x soft close hinges

DETAILS QR CODE

Product Models

Model
KT72-293(A) Full overlay

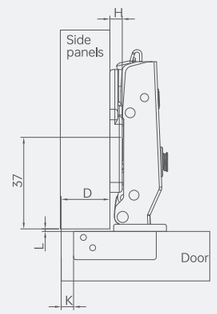

H=14+K-D

D \ K / H	3	4	5	6	7
0	17	18	19	20	21

Model
KT72-283(A) Half overlay

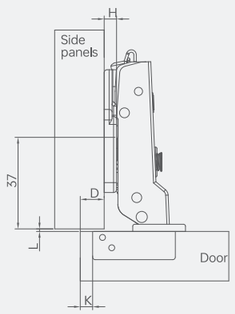

H=4+K-D

D \ K / H	3	4	5	6	7
0	7	8	9	10	11

Model
KT72-273(A) Inset

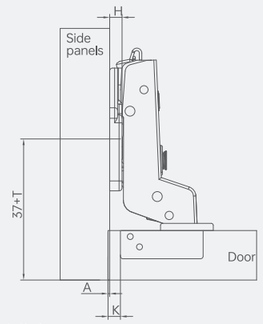

H=-4+K+A

A \ K / H	3	4	5	6	7
0	1	0	-1	-2	-3

Required accessories (A) indicates required accessories

C04
3D Base

B04
Four-hole Clip-on base

B02
Two-hole Clip-on base

Optional accessories

G01
Decorative
Arm Cover

G02
Hinge Cup
Cover

S02
Wood Screws
M4x14mm

S03
Euro Screws

J10 Dowel
Φ10×12mm

J08 Dowel
Φ8×10mm

KT72 Hinge

Clip-on

Product Specifications

Hinge Cup Depth: 11.5mm
Opening Angle: 102±3°
Quick-release base compatible
Door Panel (K) Thickness: 3–7mm (total usable door thickness: 15–22mm)
Soft-close activation at ≤5°
Sturdy Anti-Shock Design
Depth adjustment: 6.6mm
Horizontal adjustment: 5mm

Standard Configuration

S01
12x wood screws
M4x16mm

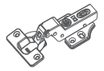

2x soft close hinges

DETAILS QR CODE

Product Models

Model
KT72-292(A) Full overlay

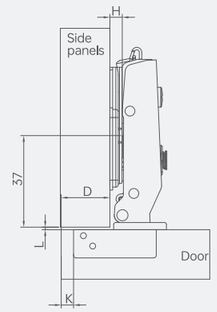

H=14+K-D

D \ H \ K	3	4	5	6	7
0	17	18	19	20	21

Model
KT72-282(A) Half overlay

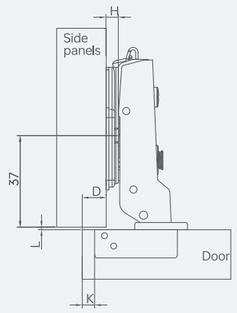

H=4+K-D

D \ H \ K	3	4	5	6	7
0	7	8	9	10	11

Model
KT72-272(A) Inset

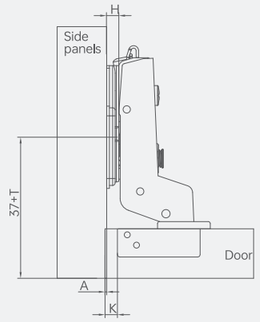

H=-4+K+A

A \ H \ K	3	4	5	6	7
0	1	0	-1	-2	-3

Required accessories (A) indicates required accessories

C04
3D Base

B04
Four-hole Clip-on base

B02
Two-hole Clip-on base

Optional accessories

G01
Decorative
Arm Cover

G02
Hinge Cup
Cover

S02
Wood Screws
M4x14mm

S03
Euro Screws

J10 Dowel
Φ10×12mm

J08 Dowel
Φ8×10mm

KT72 Hinge

Fix-on

Product Specifications

Hinge Cup Depth: 11.5mm
Opening Angle: 102±3°
Door Panel (K) Thickness: 3–7mm
total usable door thickness: 15–22mm
Soft-close activation at ≤5°
Sturdy Anti-Shock Design
Depth adjustment: 6.6mm
Horizontal adjustment: 5mm

Standard Configuration

S01
12x wood screws
M4x16mm

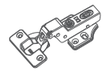

2x soft close hinges

DETAILS QR CODE

Product Models

Model
KT72-291(A) Full overlay

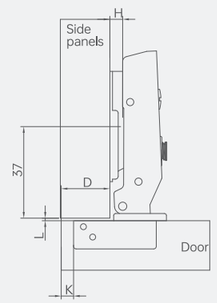

H=14+K-D

D \ K / H	3	4	5	6	7
0	17	18	19	20	21

Model
KT72-281(A) Half overlay

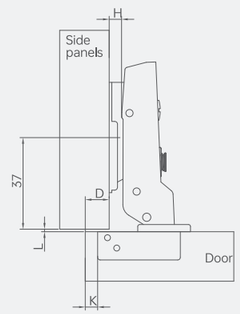

H=4+K-D

D \ K / H	3	4	5	6	7
0	7	8	9	10	11

Model
KT72-271(A) Inset

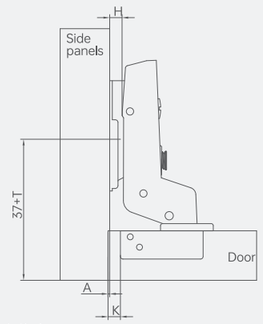

H=-4+K+A

A \ K / H	3	4	5	6	7
0	1	0	-1	-2	-3

Required accessories (A) indicates required accessories

A04
Four-hole Fix-on base

A02
Two-hole Fix-on base

Optional accessories

G01
Decorative
Arm Cover

G02
Hinge Cup
Cover

S02
Wood Screws
M4x14mm

KL72 Hinge

3D Adjustment

Product Specifications

Hinge Cup Depth: 9.7mm
Opening Angle: 102±3°
Aluminum Frame Drilling Size: 28mm
compatible with aluminum profiles (P) width: 19–23mm
Soft-Close Activation: ≤5° closing angle
Sturdy Anti-Shock Design:
Depth adjustment: 6.6mm
Horizontal adjustment: 5mm

Standard Configuration

S01
6x wood screws
M4x16mm

S05
4x Screw for aluminum frame
4x8mm

DETAILS QR CODE

2x soft close hinges

Product Models

Model
KL72-293(A) Full overlay

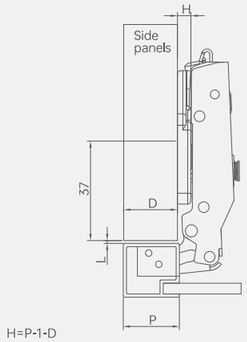

H=P-1-D

D \ P / H	19	20	21	22	23
0	18	19	20	21	22

Model
KL72-283(A) Half overlay

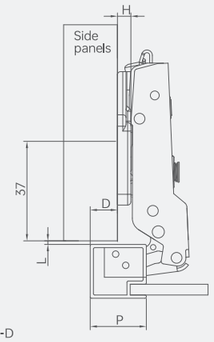

H=P-11-D

D \ P / H	19	20	21	22	23
0	8	9	10	11	12

Model
KL72-273(A) Inset

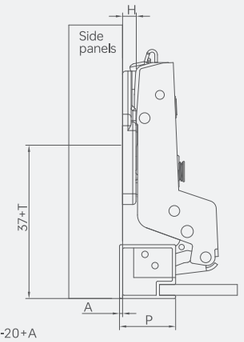

H=P-20+A

A \ P / H	19	20	21	22	23
0	1	0	-1	-2	-3

Required accessories (A) indicates required accessories

C04
3D Base

B04
Four-hole Clip-on base

B02
Two-hole Clip-on base

Optional accessories

G01
Decorative
Arm Cover

S02
Wood Screws
M4x14mm

KL72 Hinge

Clip-on

Product Specifications

Hinge Cup Depth: 9.7mm
Opening Angle: 102±3°
Aluminum Frame Drilling Size: 28mm
compatible with aluminum profiles (P) width: 19–23mm
Soft-Close Activation: ≤5° closing angle
Sturdy Anti-Shock Design:
Depth adjustment: 8mm
Horizontal adjustment: 5mm

Standard Configuration

S01
8x wood screws
M4x16mm

S05
4x Screw for aluminum frame
4x8mm

DETAILS QR CODE

2x soft close hinges

Product Models

Model
KL72-292(A) Full overlay

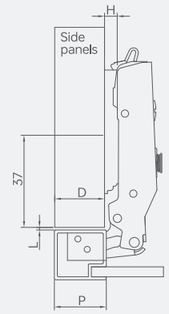

H=P-1-D

D \ H \ P	19	20	21	22	23
0	18	19	20	21	22

Model
KL72-282(A) Half overlay

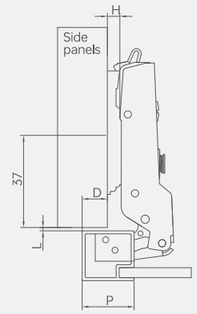

H=P-11-D

D \ H \ P	19	20	21	22	23
0	8	9	10	11	12

Model
KL72-272(A) Inset

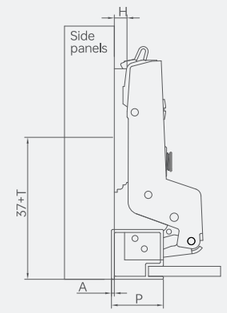

H=P-20+A

A \ H \ P	19	20	21	22	23
0	1	0	-1	-2	-3

Required accessories (A) indicates required accessories

C04
3D Base

B04
Four-hole Clip-on base

B02
Two-hole Clip-on base

Optional accessories

G01
Decorative
Arm Cover

S02
Wood Screws
M4x14mm

KL72 Hinge

Fix-on

Product Specifications

Hinge Cup Depth: 9.7mm
Opening Angle: 102±3°
Aluminum Frame Drilling Size: 28mm
compatible with aluminum profiles (P) width: 19–23mm
Soft-Close Activation: ≤5° closing angle
Sturdy Anti-Shock Design:
Depth adjustment: 8mm
Horizontal adjustment: 5mm

Standard Configuration

S01
8x wood screws
M4x16mm

S05
4x Screw for aluminum frame
4x8mm

DETAILS QR CODE

2x soft close hinges

Product Models

Model
KL72-291(A) Full overlay

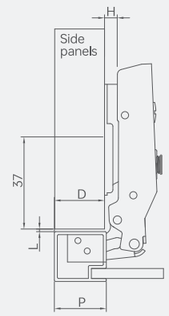

H=P-1-D

D \ H \ P	19	20	21	22	23
0	18	19	20	21	22

Model
KL72-281(A) Half overlay

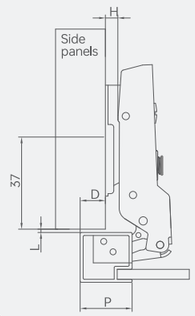

H=P-11-D

D \ H \ P	19	20	21	22	23
0	8	9	10	11	12

Model
KL72-271(A) Inset

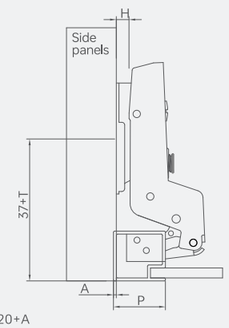

H=P-20+A

A \ H \ P	19	20	21	22	23
0	1	0	-1	-2	-3

Required accessories (A) indicates required accessories

A04
Four-hole Fix-on base

A02
Two-hole Fix-on base

Optional accessories

G01
Decorative
Arm Cover

S02
Wood Screws
M4x14mm

KT68

ROLLER SOFT-CLOSE HINGE SERIES

The Invisible Dancer of Living Spaces

Every opening and closing is an artistic performance. With patented roller technology, it delivers silky-smooth motion—noiseless, impact-free, like the first gentle rays of dawnawakening every corner of your home.
Its minimalist, refined design seamlessly integrates into any décor,reflecting the owner's distinctive taste.

Patented Roller Structure and unique design ensure effortless, smooth operation. Robust roller material reduces wear and tear for long-lasting durability.

GARIS®

GARIS
GARIS®

KT68 Hinge

3D Adjustment

Product Specifications

Hinge Cup Depth: 11.5mm
Opening Angle: 102±3°
3D adjustable, quick-release base compatible
Door Panel (K) Thickness: 3–7mm
total usable door thickness: 15–22mm
Sturdy Anti-Shock Design
Depth adjustment: 4.8mm
Horizontal adjustment: 7mm

Standard Configuration

S01
10x wood screws
M4x16mm

2x soft close hinges

DETAILS QR CODE

Product Models

Model
KT68-293(A) Full overlay

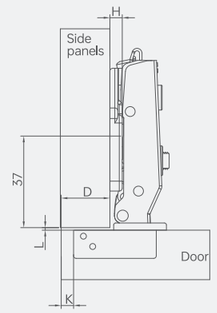

H=14+K-D

D \ H	3	4	5	6	7
K					
0	17	18	19	20	21

Model
KT68-283(A) Half overlay

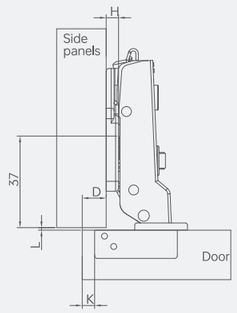

H=4+K-D

D \ H	3	4	5	6	7
K					
0	7	8	9	10	11

Model
KT68-273(A) Inset

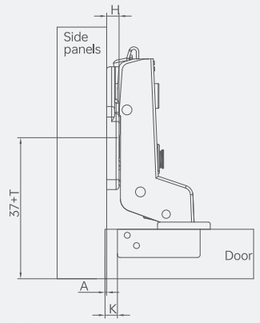

H=-4+K+A

A \ H	3	4	5	6	7
K					
0	1	0	-1	-2	-3

Required accessories (A) indicates required accessories

C04
3D Base

B04
Four-hole Clip-on base

B02
Two-hole Clip-on base

Optional accessories

G01
Decorative
Arm Cover

G02
Hinge Cup
Cover

S02
Wood Screws
M4x14mm

S03
Euro Screws

J10 Dowel
Φ10×12mm

J08 Dowel
Φ8×10mm

KT68 Hinge

Clip-on

Product Specifications

Hinge Cup Depth: 11.5mm
Opening Angle: 102±3°
Quick-release base compatible
Door Panel (K) Thickness: 3–7mm
total usable door thickness: 15–22mm
Sturdy Anti-Shock Design
Depth adjustment: 8mm
Horizontal adjustment: 7mm

Standard Configuration

S01
12x wood screws
M4x16mm

2x soft close hinges

DETAILS QR CODE

Product Models

Model
KT68-292(A) Full overlay

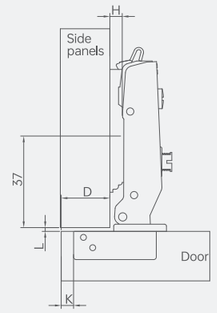

H=14+K-D

D \ K / H	3	4	5	6	7
0	17	18	19	20	21

Model
KT68-282(A) Half overlay

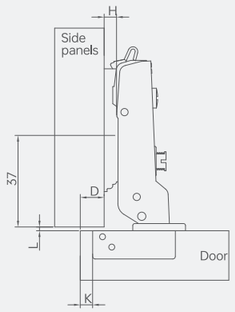

H=4+K-D

D \ K / H	3	4	5	6	7
0	7	8	9	10	11

Model
KT68-272(A) Inset

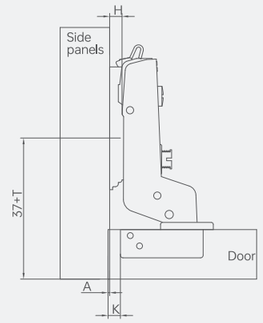

H=-4+K+A

A \ K / H	3	4	5	6	7
0	1	0	-1	-2	-3

Required accessories (A) indicates required accessories

C04
3D Base

B04
Four-hole Clip-on base

B02
Two-hole Clip-on base

Optional accessories

G01
Decorative
Arm Cover

G02
Hinge Cup
Cover

S02
Wood Screws
M4x14mm

S03
Euro Screws

J10 Dowel
Φ10×12mm

J08 Dowel
Φ8×10mm

KT68 Hinge

Fix-on

Product Specifications

Hinge Cup Depth: 11.5mm
Opening Angle: 102±3°
Door Panel (K) Thickness: 3–7mm
total usable door thickness: 15–22mm
Sturdy Anti-Shock Design
Depth adjustment: 8mm
Horizontal adjustment: 7mm

Standard Configuration

S01
12x wood screws
M4x16mm

2x soft close hinges

DETAILS QR CODE

Product Models

Model
KT68-291(A) Full overlay

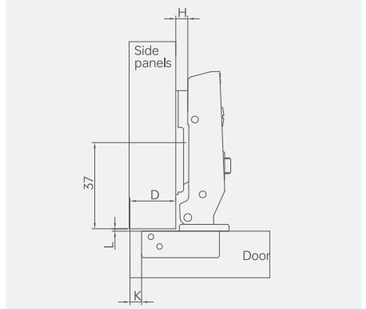

H=14+K-D

D \ K / H	3	4	5	6	7
0	17	18	19	20	21

Model
KT68-281(A) Half overlay

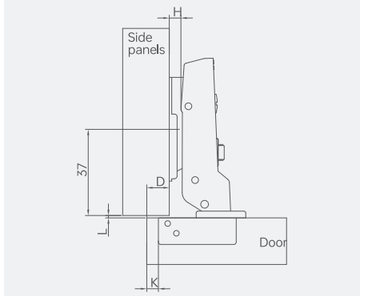

H=4+K-D

D \ K / H	3	4	5	6	7
0	7	8	9	10	11

Model
KT68-271(A) Inset

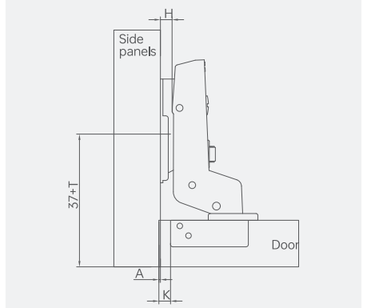

H=-4+K+A

A \ K / H	3	4	5	6	7
0	1	0	-1	-2	-3

Required accessories (A) indicates required accessories

A04
Four-hole Fix-on base

A02
Two-hole Fix-on base

Optional accessories

G01
Decorative
Arm Cover

G02
Hinge Cup
Cover

S02
Wood Screws
M4x14mm

S03
Euro Screws

KL68 Hinge

3D Adjustment

Product Specifications

Hinge Cup Depth: 9.7mm
Opening Angle: 102±3°
Aluminum Frame Drilling Size: 28mm
compatible with aluminum profiles (P) width: 19–23mm
Sturdy Anti-Shock Design
Depth adjustment: 4.8mm
Horizontal adjustment: 7mm

Standard Configuration

S01
6x wood screws
M4x16mm

S05
4x Screw for aluminum frame
4x8mm

DETAILS QR CODE

2x soft close hinges

Product Models

Model
KL68-293(A) Full overlay

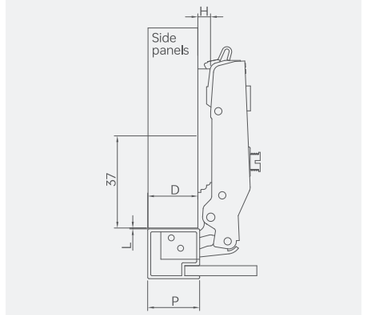

H=P-1-D

D \ H \ P	19	20	21	22	23
0	18	19	20	21	22

Model
KL68-283(A) Half overlay

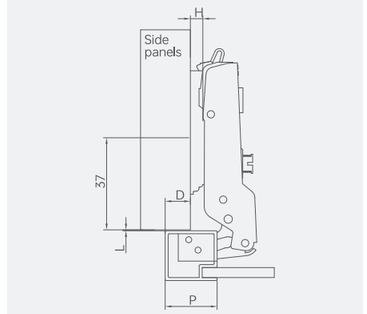

H=P-11-D

D \ H \ P	19	20	21	22	23
0	8	9	10	11	12

Model
KL68-273(A) Inset

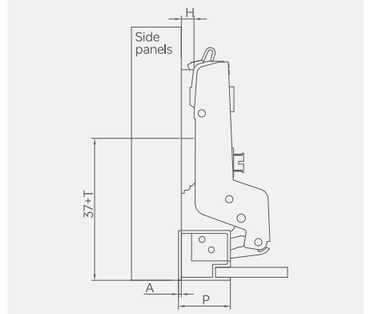

H=P-20+A

A \ H \ P	19	20	21	22	23
0	1	0	-1	-2	-3

Required accessories (A) indicates required accessories

C04
3D Base

B04
Four-hole Clip-on base

B02
Two-hole Clip-on base

Optional accessories

G01
Decorative
Arm Cover

S02
Wood Screws
M4x14mm

KL68 Hinge

Clip-on

Product Specifications

Hinge Cup Depth: 9.7mm
Opening Angle: 102±3°
Aluminum Frame Drilling Size: 28mm
compatible with aluminum profiles (P) width: 19–23mm
Sturdy Anti-Shock Design
Depth adjustment: 8mm
Horizontal adjustment: 7mm

Standard Configuration

S01
8x wood screws
M4x16mm

S05
4x Screw for aluminum frame
4x8mm

DETAILS QR CODE

2x soft close hinges

Product Models

Model
KL68-292(A) Full overlay

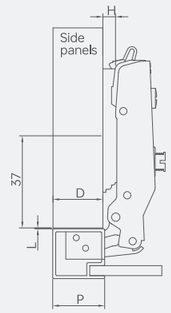

H=P-1-D

D \ H \ P	19	20	21	22	23
0	18	19	20	21	22

Model
KL68-282(A) Half overlay

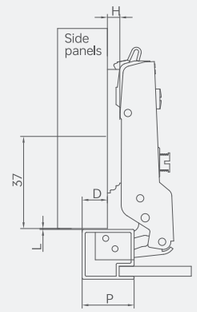

H=P-11-D

D \ H \ P	19	20	21	22	23
0	8	9	10	11	12

Model
KL68-272(A) Inset

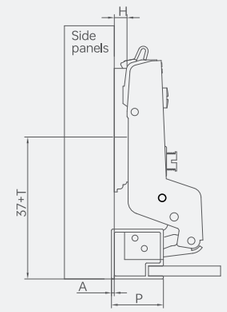

H=P-20+A

A \ H \ P	19	20	21	22	23
0	1	0	-1	-2	-3

Required accessories (A) indicates required accessories

C04
3D Base

B04
Four-hole Clip-on base

B02
Two-hole Clip-on base

Optional accessories

G01
Decorative
Arm Cover

S02
Wood Screws
M4x14mm

KL68 Hinge

Fix-on

Product Specifications

Hinge Cup Depth: 9.7mm
Opening Angle: 102±3°
Aluminum Frame Drilling Size: 28mm
compatible with aluminum profiles (P) width: 19–23mm
Sturdy Anti-Shock Design
Depth adjustment: 8mm
Horizontal adjustment: 7mm

Standard Configuration

S01
8x wood screws
M4x16mm

S05
4x Screw for aluminum frame
4x8mm

DETAILS QR CODE

2x soft close hinges

Product Models

Model
KL68-291(A) Full overlay

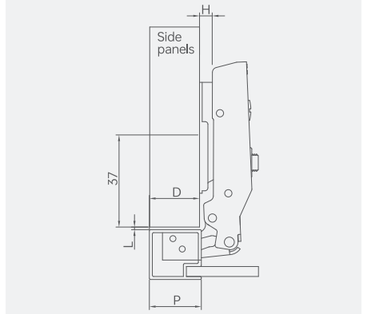

H=P-1-D

D \ P / H	19	20	21	22	23
0	18	19	20	21	22

Model
KL68-281(A) Half overlay

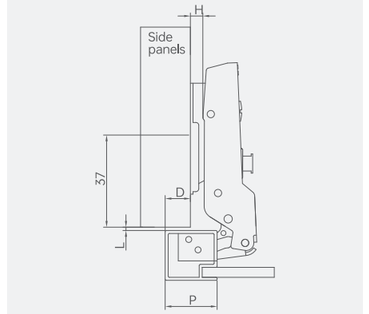

H=P-11-D

D \ P / H	19	20	21	22	23
0	8	9	10	11	12

Model
KL68-271(A) Inset

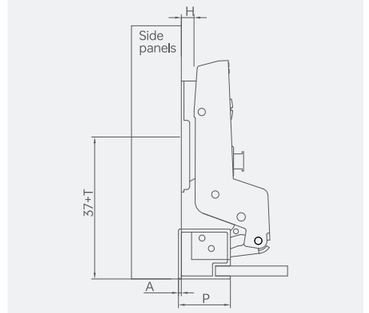

H=P-20+A

A \ P / H	19	20	21	22	23
0	1	0	-1	-2	-3

Required accessories (A) indicates required accessories

A04
Four-hole Fix-on base

A02
Two-hole Fix-on base

Optional accessories

G01
Decorative
Arm Cover

S02
Wood Screws
M4x14mm

KC76

UNIVERSAL SOFT-CLOSING HINGE SERIES FOR THICK/THIN DOOR PANEL

Gentle Touch, Art in Motion – Universal Soft-Closing Hinges for Thick and Thin Panels

Every gentle touch of your fingertips pays homage to the artistry of home design. Crafted with precision, our hinges bring endless elegance to the opening and closing of door panels. Compatible with both thick and thin panels, they showcase unparalleled versatility.

Adapts to 15–28mm door thicknesses, meeting diverse home scenarios without frequent hinge replacements. Adjust installation methods flexibly based on door thickness for a perfect fit.

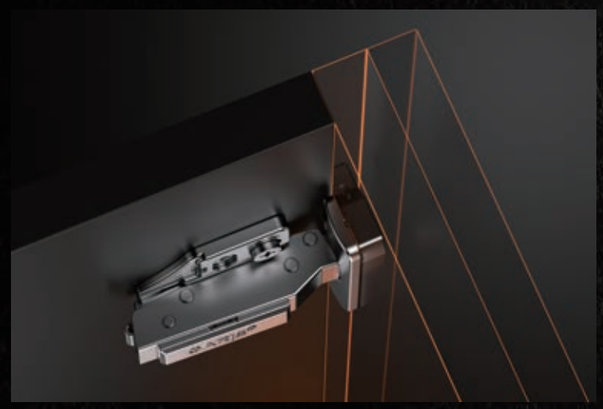

GARIS®

KC76 Hinge

3D Adjustment

Product Specifications

Hinge Cup Depth: 11.5mm
Opening Angle: 95±3°
Quick-release base compatible
Door Panel (K) Thickness: 3–7mm
total usable door thickness: 15–28mm
Soft-close activation at ≤5°
Sturdy Anti-Shock Design
Depth adjustment: 6.6mm
Horizontal adjustment: 5mm

Standard Configuration

S01
10x wood screws
M4x16mm

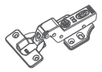

2x soft close hinges

DETAILS QR CODE

Product Models

Model
KC76-293(A) Full overlay

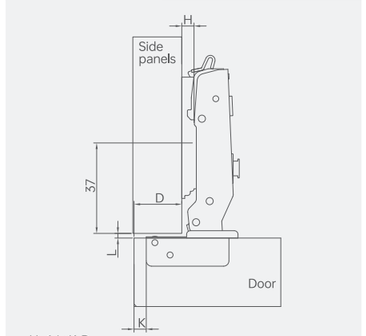

H=14+K-D

D \ K / H	3	4	5	6	7
0	17	18	19	20	21

Model
KC76-283(A) Half overlay

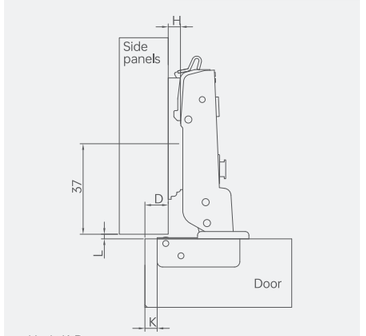

H=4+K-D

D \ K / H	3	4	5	6	7
0	7	8	9	10	11

Model
KC76-273(A) Inset

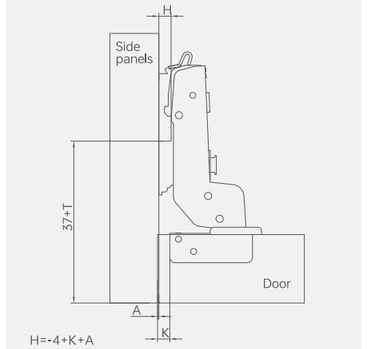

H=-4+K+A

A \ K / H	3	4	5	6	7
0	1	0	-1	-2	-3

Required accessories (A) indicates required accessories

C04
3D Base

B04
Four-hole Clip-on base

B02
Two-hole Clip-on base

Optional accessories

G01
Decorative
Arm Cover

G02
Hinge Cup
Cover

S02
Wood Screws
M4x14mm

S03
Euro Screws

J10 Dowel
Φ10×12mm

J08 Dowel
Φ8×10mm

KC76 Hinge

Clip-on

Product Specifications

Hinge Cup Depth: 11.5mm
Opening Angle: 95±3°
Quick-release base compatible
Door Panel (K) Thickness: 3–7mm
total usable door thickness: 15–28mm
Soft-close activation at ≤5°
Sturdy Anti-Shock Design
Depth adjustment:8mm
Horizontal adjustment: 5mm

Standard Configuration

S01
12x wood screws
M4x16mm

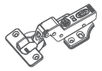

2x soft close hinges

DETAILS QR CODE

Product Models

Model
KC76-292(A) Full overlay

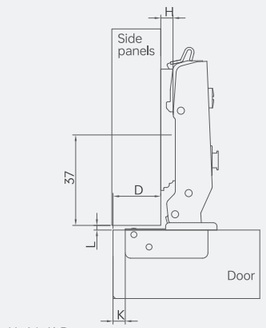

H=14+K-D

D \ K / H	3	4	5	6	7
0	17	18	19	20	21

Model
KC76-282(A) Half overlay

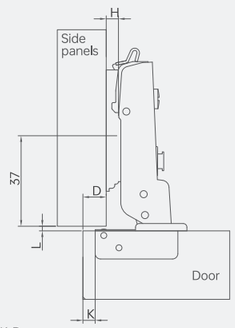

H=4+K-D

D \ K / H	3	4	5	6	7
0	7	8	9	10	11

Model
KC76-272(A) Inset

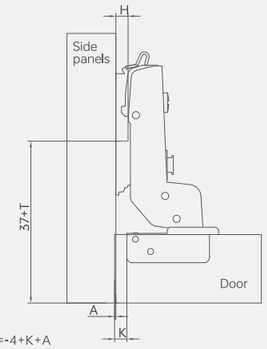

H=-4+K+A

A \ K / H	3	4	5	6	7
0	1	0	-1	-2	-3

Required accessories (A) indicates required accessories

C04
3D Base

B04
Four-hole Clip-on base

B02
Two-hole Clip-on base

Optional accessories

G01
Decorative
Arm Cover

G02
Hinge Cup
Cover

S02
Wood Screws
M4x14mm

S03
Euro Screws

J10 Dowel
Φ10×12mm

J08 Dowel
Φ8×10mm

KC76 Hinge

Fix-on

Product Specifications

Hinge Cup Depth: 11.5mm
Opening Angle: 95±3°
Door Panel (K) Thickness: 3–7mm
total usable door thickness: 15–28mm
Soft-close activation at ≤5°
Sturdy Anti-Shock Design
Depth adjustment: 8mm
Horizontal adjustment: 5mm

产品标配

S01
12x wood screws
M4x16mm

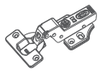

2x soft close hinges

DETAILS QR CODE

Product Models

Model
KC76-291(A) Full overlay

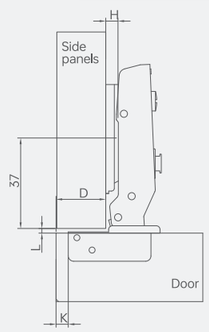

H=14+K-D

D \ H	K	3	4	5	6	7
0		17	18	19	20	21

Model
KC76-281(A) Half overlay

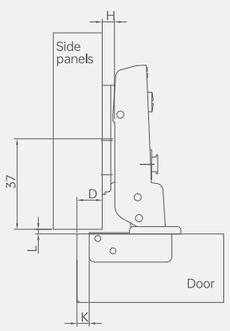

H=4+K-D

D \ H	K	3	4	5	6	7
0		7	8	9	10	11

Model
KC76-271(A) Inset

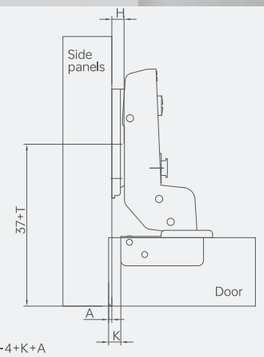

H=-4+K+A

A \ H	K	3	4	5	6	7
0		1	0	-1	-2	-3

Required accessories (A) indicates required accessories

A04
Four-hole Fix-on base

A02
Two-hole Fix-on base

Optional accessories

G01
Decorative
Arm Cover

G02
Hinge Cup
Cover

S02
Wood Screws
M4x14mm

S03
Euro Screws

KS201

STAINLESS STEELS SOFT
-CLOSING HINGE SERIES

Austere Beauty

KS201 Stainless Steels Soft-closing Hinge
Infused with an icy luster that embodies the artisan's relentless dedication. This hinge also brings the modern industrial feeling to the house. Made from 201 stainless steel, it delivers exceptional corrosion resistance, hardness and remarkable toughness. Its superior rust-proof properties ensure enduring brilliance, offering long lasting feature to the hinge and furniture.

GARIS
GARIS

KS201 Stainless Steels Hinge

3D Adjustment

Product Introduction

Open Degree: 103±2°
Door Dimension: 3-7mm
Hinge Cup Material: 0.7mm SUS201 Stainless Steel
Hinge Arm Material: 1.0mm SUS201 Stainless Steel
Hinge Base Material: 1.0mm SUS201 Stainless Steel

Standard Configuration

S01
12Pcs Woodscrew
M4x16mm

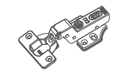

2Pcs Soft-closing Hinges

DETAILS QR CODE

Production Specification

Model
KS201-193 Full overlay

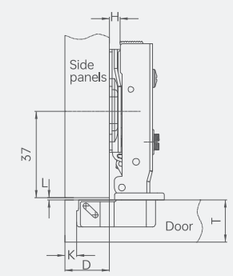

H=14+K-D

D \ K / H	3	4	5	6	7
0	17	18	19	20	21

Model
KS201-183 Half overlay

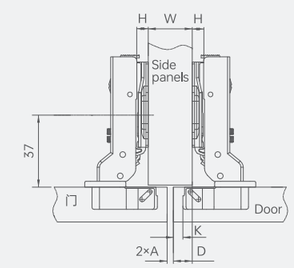

H=4+K-D

D \ K / H	3	4	5	6	7
0	7	8	9	10	11

Model
KS201-173 Inset

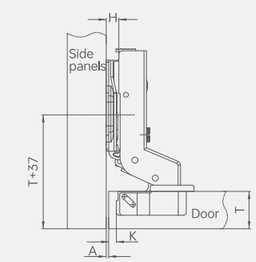

H=-4+K+A

A \ K / H	3	4	5	6	7
0	1	0	-1	-2	-3

Optional Accessory

GARIS®

G01
Decorative Arm Cover

J10 Dowel
Φ10×12mm

J08 Dowel
Φ8×10mm

KS201 Stainless Steels Hinge

Clip-on

Product Introduction

Open Degree: 103±2°
Door Dimension: 3-7mm
Hinge Cup Material: 0.7mm SUS201 Stainless Steel
Hinge Arm Material: 1.0mm SUS201 Stainless Steel
Hinge Base Material: 1.0mm SUS201 Stainless Steel

Standard Configuration

S01
12Pcs Woodscrew
M4x16mm

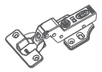

2Pcs Soft-closing Hinges

DETAILS QR CODE

Production Specification

Model
KS201-192 Full overlay

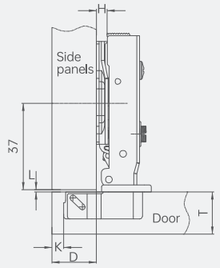

H=14+K-D

D \ H	K	3	4	5	6	7
0		17	18	19	20	21

Model
KS201-182 Half overlay

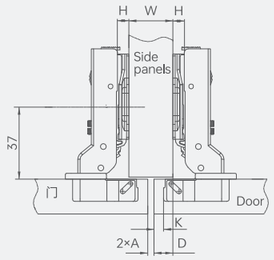

H=4+K-D

D \ H	K	3	4	5	6	7
0		7	8	9	10	11

Model
KS201-172 Inset

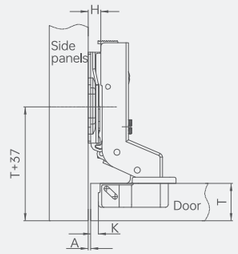

H=-4+K+A

A \ H	K	3	4	5	6	7
0		1	0	-1	-2	-3

Optional Accessory

GARIS®

G01
Decorative Arm Cover

J10 Dowel
Φ10×12mm

J08 Dowel
Φ8×10mm

KS201 Stainless Steels Hinge

Fix-on

Product Introduction

Open Degree: 103±2°
Door Dimension: 3-7mm
Hinge Cup Material: 0.7mm SUS201 Stainless Steel
Hinge Arm Material: 1.0mm SUS201 Stainless Steel
Hinge Base Material: 1.0mm SUS201 Stainless Steel

Standard Configuration

S01
12Pcs Woodscrew
M4x16mm

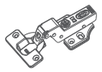

2Pcs Soft-closing Hinges

DETAILS QR CODE

Production Specification

Model
KS201-191 Full overlay

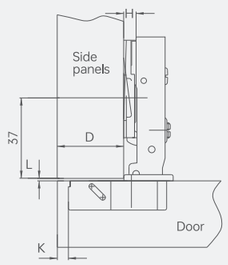

H=14+K-D

D \ K / H	3	4	5	6	7
0	17	18	19	20	21

Model
KS201-181 Half overlay

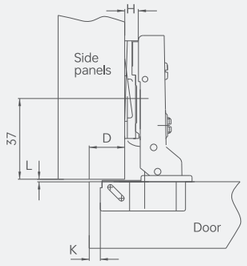

H=4+K-D

D \ K / H	3	4	5	6	7
0	7	8	9	10	11

Model
KS201-171 Inset

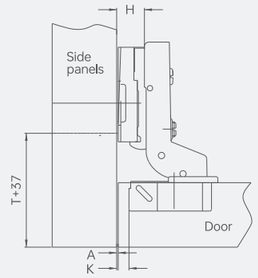

H=-4+K+A

A \ K / H	3	4	5	6	7
0	1	0	-1	-2	-3

Optional Accessory

GARIS®

G01
Decorative Arm Cover

KS304

STAINLESS STEELS SOFT-CLOSING HINGE SERIES

The Beauty of Quality

304 Stainless Steels Soft-closing hinge, not only comes with great function, but also a stylish upgrade for the house and office, turning every details into a showcase of sophistication.

304 Stainless Steels Soft-closing hinge, enhancing with tough, rust & corrosion-resistant, heavy-duty strength, silent soft-closing, precise adjustment, and easy to install features.

GARIS®格瑞斯
GARIS
GARIS

KS304 Stainless Steels Hinge

3D Adjustment

Product Introduction

Open Degree: 103±2°
Door Dimension: 3-7mm
Hinge Cup Material: 0.7mm SUS304 Stainless Steel
Hinge Arm Material: 1.0mm SUS304 Stainless Steel
Hinge Base Material: 1.0mm SUS304 Stainless Steel

Standard Configuration

S01
12Pcs Woodscrew
M4x16mm

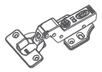

2Pcs Soft-closing Hinges

DETAILS QR CODE

Production Specification

Model
KS304-193 Full overlay

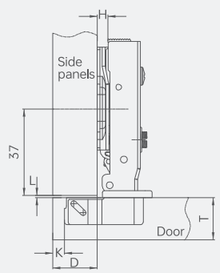

H=14+K-D

D \ H \ K	3	4	5	6	7
0	17	18	19	20	21

Model
KS304-183 Half overlay

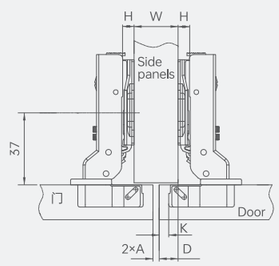

H=4+K-D

D \ H \ K	3	4	5	6	7
0	7	8	9	10	11

Model
KS304-173 Inset

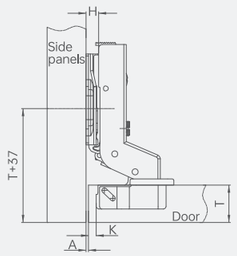

H=-4+K+A

A \ H \ K	3	4	5	6	7
0	1	0	-1	-2	-3

Optional Accessory

G01
Decorative Arm Cover

J10 Dowel
Φ10×12mm

J08 Dowel
Φ8×10mm

KS304 Stainless Steels Hinge

Clip-on

Product Introduction

Open Degree: 103±2°
Door Dimension: 3-7mm
Hinge Cup Material: 0.7mm SUS304 Stainless Steel
Hinge Arm Material: 1.0mm SUS304 Stainless Steel
Hinge Base Material: 1.0mm SUS304 Stainless Steel

Standard Configuration

S01
12Pcs Woodscrew
M4x16mm

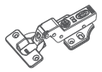

2Pcs Soft-closing Hinges

DETAILS QR CODE

Production Specification

Model
KS304-192 Full overlay

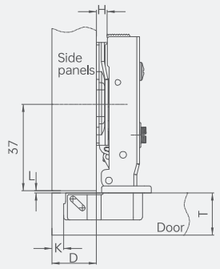

H=14+K-D

D \ K / H	3	4	5	6	7
0	17	18	19	20	21

Model
KS304-182 Half overlay

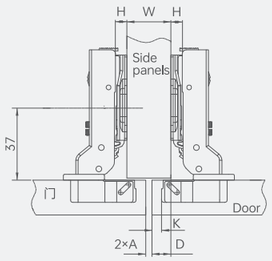

H=4+K-D

D \ K / H	3	4	5	6	7
0	7	8	9	10	11

Model
KS304-172 Inset

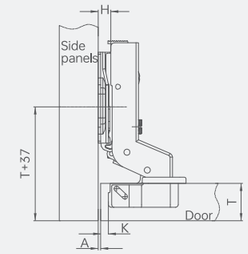

H=-4+K+A

A \ K / H	3	4	5	6	7
0	1	0	-1	-2	-3

Optional Accessory

G01
Decorative Arm Cover

J10 Dowel
Φ10×12mm

J08 Dowel
Φ8×10mm

KS304 Stainless Steels Hinge

Fix-on

Product Introduction

Open Degree: 103±2°
Door Dimension: 3-7mm
Hinge Cup Material: 0.7mm SUS304 Stainless Steel
Hinge Arm Material: 1.0mm SUS304 Stainless Steel
Hinge Base Material: 1.0mm SUS304 Stainless Steel

Standard Configuration

S01
12Pcs Woodscrew
M4x16mm

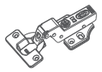

2Pcs Soft-closing Hinges

DETAILS QR CODE

Production Specification

Model
KS304-191 Full overlay

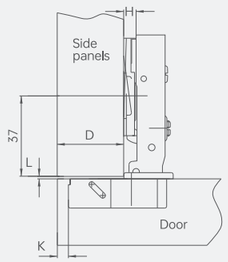

H=14+K-D

D \ K / H	3	4	5	6	7
0	17	18	19	20	21

Model
KS304-181 Half overlay

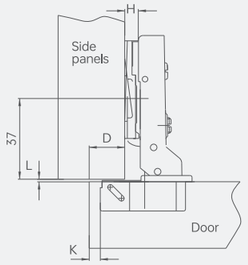

H=4+K-D

D \ K / H	3	4	5	6	7
0	7	8	9	10	11

Model
KS304-171 Inset

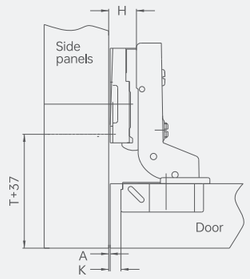

H=-4+K+A

A \ K / H	3	4	5	6	7
0	1	0	-1	-2	-3

Optional Accessory

G01
Decorative Arm Cover

J10 Dowel
Φ10×12mm

J08 Dowel
Φ8×10mm

GT

SPECIAL DEGREE SOFT
-CLOSING HINGE SERIES

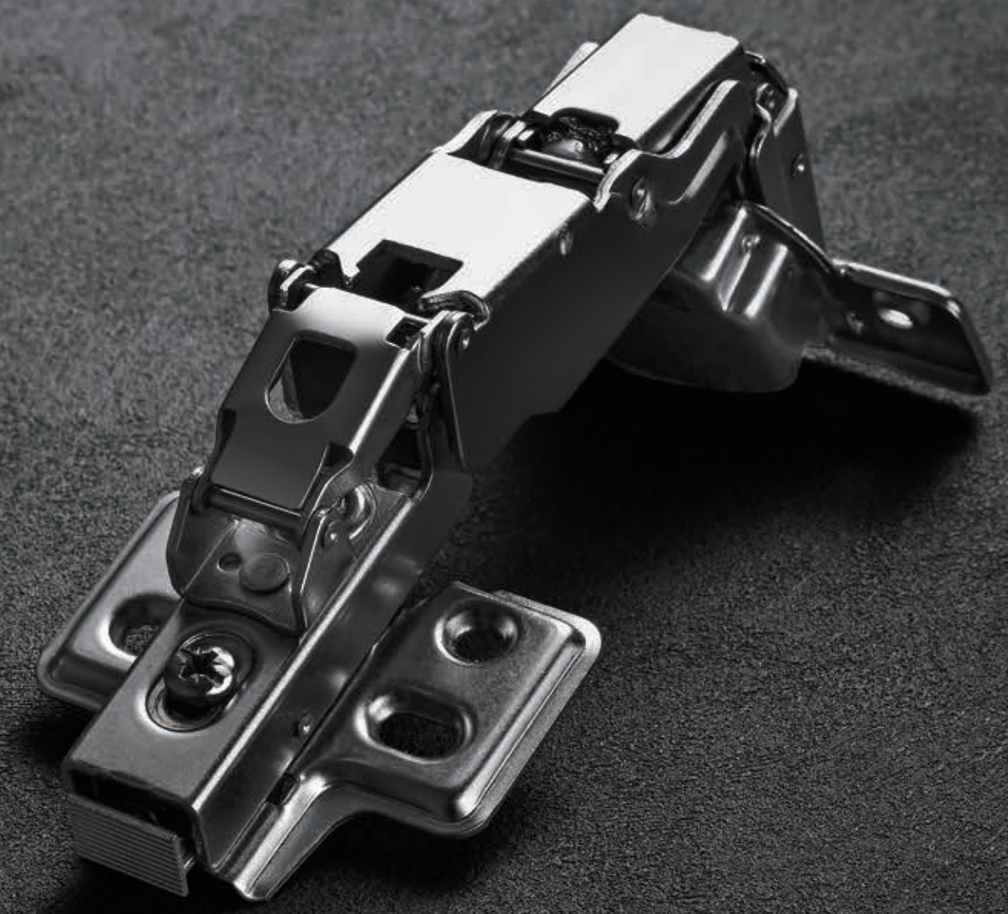

Artisanal Mastery

The application of Special degree hinges epitomizes the high-end customized furniture with artisanal spirit, presenting with excellent details. Designed for closet, wardrobe, bookshelves, cabinets and beyond, especially with the irregular-shaped and corner cabinets, enhancing both functionality and aesthetic appeal.

GT Special Degree Hinge

GT165

Product Introduction

Open Degree: 165-6°
Closing Degree: 87°±2°
3D Adjustment
Door Dimension: 3-7mm, Range of door thickness 14mm-26mm
Material:1.8mm extra thick stainless steels
Gap Adjustment: -1.9mm/+1.9mm

Standard Configuration

S01
12Pcs Woodscrew
M4x16mm

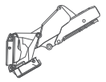

2Pcs Soft-closing Hinges

DETAILS QR CODE

Production Specification

Model
GT165-093 Full overlay

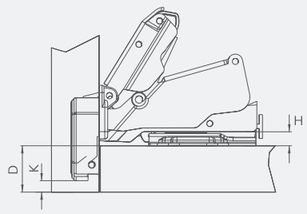

H=14+K-D

D \ K / H	3	4	5	6	7
0	17	18	19	20	21

Model
GT165-083 Half overlay

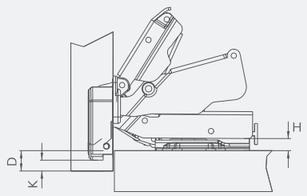

H=4+K-D

D \ K / H	3	4	5	6	7
0	7	8	9	10	11

Model
GT165-073 Inset

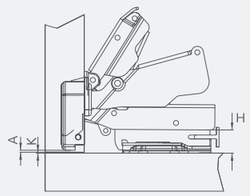

H=-4+K+A

A \ K / H	3	4	5	6	7
0	1	0	-1	-2	-3

GT Special Degree Hinge

GT135

Product Introduction

Open Degree: 135-6°,compatible with 165° hinge
Range of door thickness: 14mm-22mm
Door Dimension: 3-7mm
Material: Zinc Alloy with Nickel Plated Finish
Optional slide-in install
Optional 3D Adjustment

Standard Configuration

S01
12Pcs Woodscrew
M4x16mm

2Pcs Soft-closing Hinges

DETAILS QR CODE

Production Specification

Model
GT135 Clip-on Style

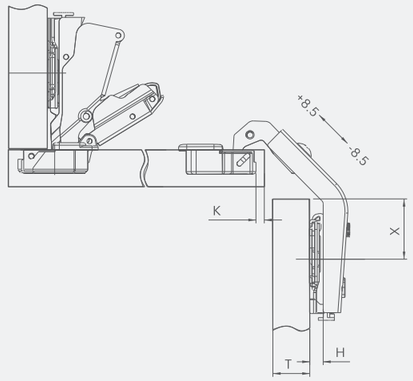

D	门厚 < 18mm	22mm > 门厚 < 18mm
H	2mm	0mm
X	37mm	37mm

GT Special Degree Hinge

GT90

Product Introduction

开启角度：100°
关闭角度：+90°
门板可用厚度：14mm-22mm
门板（K）尺寸：4-5mm
可选3D Adjustment
材质：钢/合金，镀镍

Standard Configuration

S01
12Pcs Woodscrew
M4x16mm

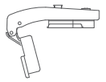

2Pcs Soft-closing Hinges

DETAILS QR CODE

Production Specification

Model
GT90

H=14+K-D

X \ D / H \ K	4	5
0	20 / 3	19 / 3
2	20 / 1	19 / 1
4	20 / -1	19 / -1

D Range of Adjustment：-2.5~2.5
L Range of Adjustment：-2.5~+3
H：Base Height
D：Location for the cover cap of side panel
X：Distance of drilling for the base to side panel
K：Distance of drilling for the front panel to the cup of hinge

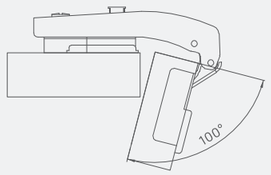

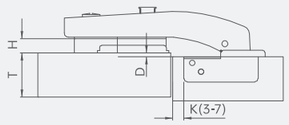

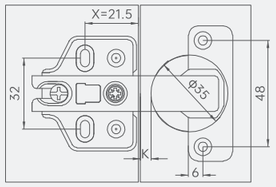

GT Special Degree Hinge

GT45

Product Introduction

Open Degree: 100°
Closing Degree: +45°
Range of door thickness: 14mm-22mm
Door Dimension: 4-7mm
Optional 3D Adjustment
Material: Steel/Alloy with Nickel Plated Finish

Standard Configuration

S01
12Pcs Woodscrew
M4x16mm

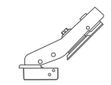

2Pcs Soft-closing Hinges

DETAILS QR CODE

Production Specification

Model
GT45

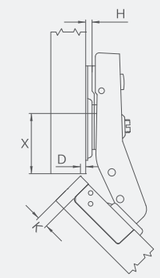

X \ D / K / H	4	5	6	7
0	37 / 3	36 / 4	35 / 5	34 / 6

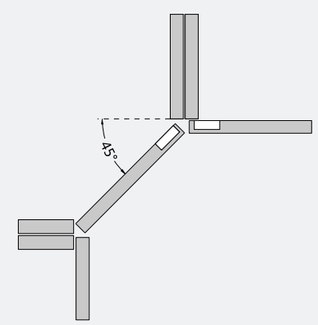

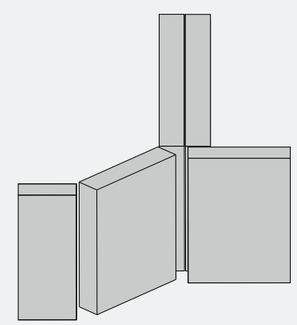

Estimating the Number of Hinges Needed Based on Door Size and Weight

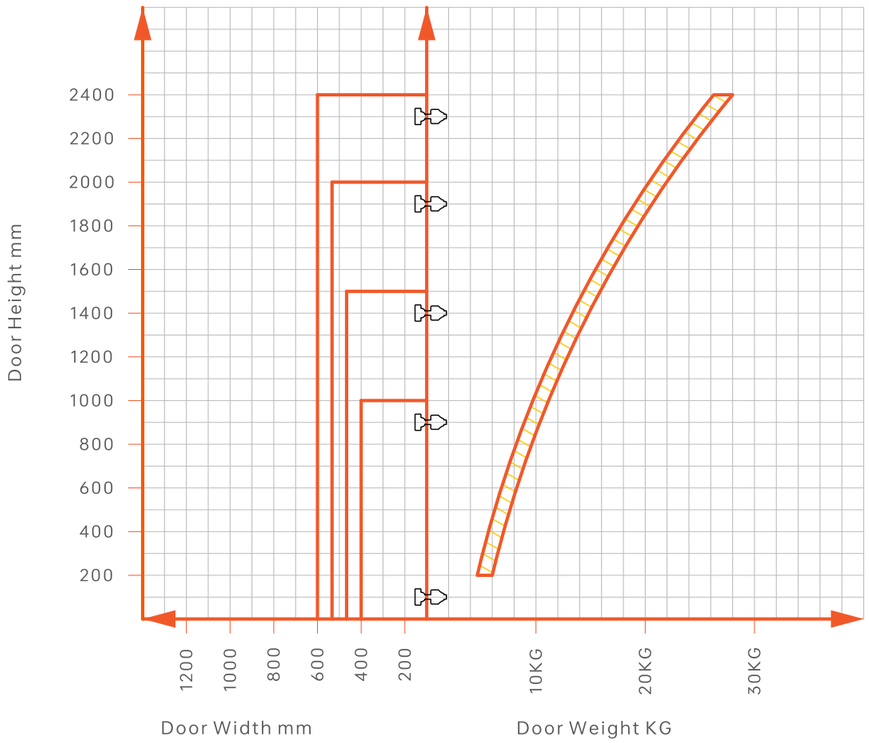

Allowance of Force and the weight of panel calculation sheet

No.	Panel Material	Density(Kg/m³)	Calculation for Weight of the Door				
01	Solid Wood	1000Kg/m³	1.Door weight = (Height × Width × Thickness) × Material density 2.Example: Standard wardrobe door (walnut): Size: 2000 × 500 × 18mm Weight: (2 × 0.5 × 0.018) × 1000 kg/m³ = 18 kg Standard kitchen cabinet door (walnut): Size: 600x500x18mm Weight: {0.6×0.5×0.018m} ×1000Kg/m³=5.4Kg Standard glass (5mm thick): Size:600×500×5mm Weight:(0.6×0.5)×12.5Kg/m³ =2.8Kg				
02	HDF	840Kg/m³					
03	Plywood	840Kg/m³					
04	MDF	730Kg/m³					
05	Chipboard	650Kg/m³					
06	Particle Board	650Kg/m³					
07	Aluminium	1000Kg/m³					
08	Glass	Thickness 5mm	Thickness 6mm	Thickness 8mm	Thickness 10mm		
		12.5Kg/m²	15Kg/m²	20Kg/m²	25Kg/m²		

Installation and Adjustment of Hinges

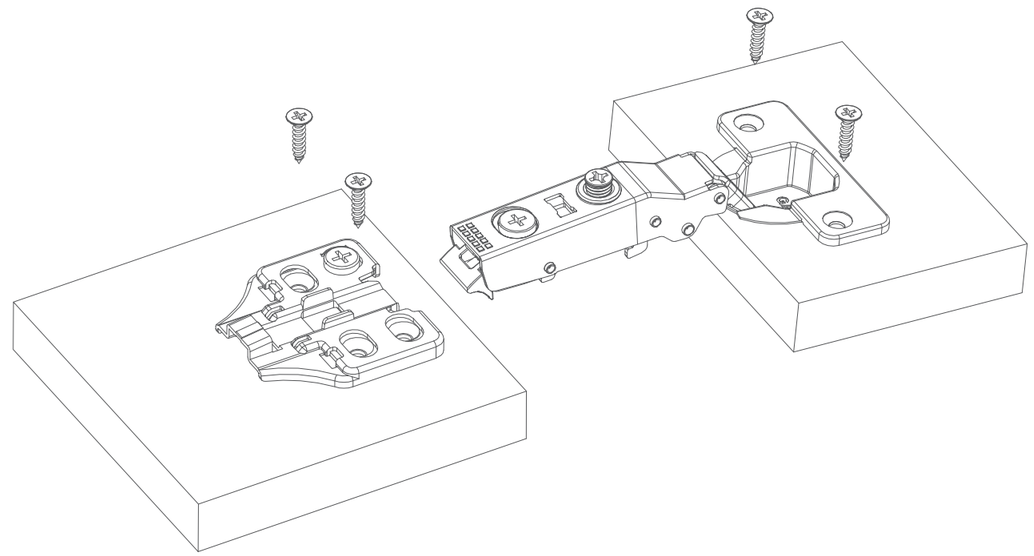

Up & down Adjustment

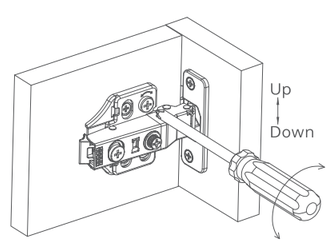

Left & right Adjustment

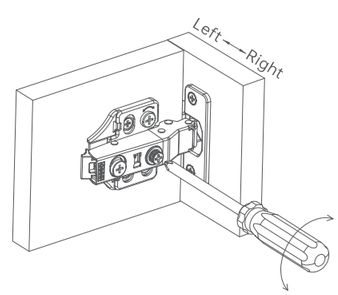

Deep Adjustment

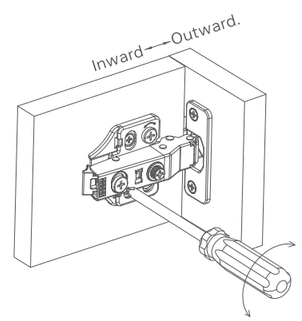

TOUCH LATCH SERIES

Touch open simple life.

Touch Latch eliminates the need for visible handles. With its built-in spring or magnetic mechanism, doors and panels can be open easily with a simple press. Quick, intuitive and even operable with hands-free gestures. It seamlessly adapts to diverse scenarios - from kitchens to closets. Designed to align with modern minimalist aesthetics, it delivers a clean, handle-free design.

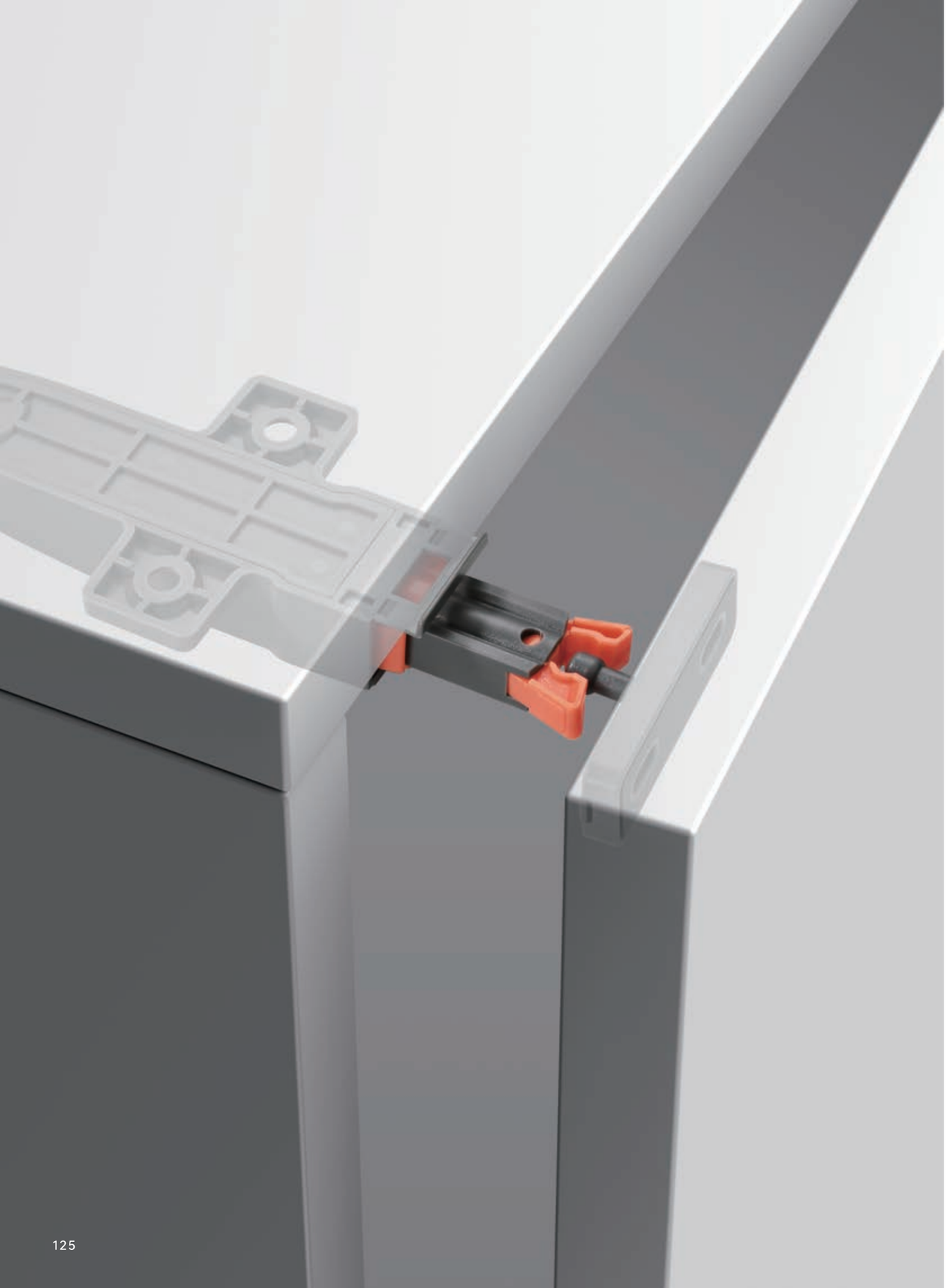

TOUCH LATCH DEVICE

KJ-K207-50N

Product Introduction

Material: Plastic
Color: Dark Gray
Unit Weight: 20g
Carton Dimensions: 53×27×30cm (L×W×H)
Quantity: 500 pieces/carton
Force Options: 30N / 40N

Included Accessories

Clip

Screws

DETAILS QR CODE

Product information

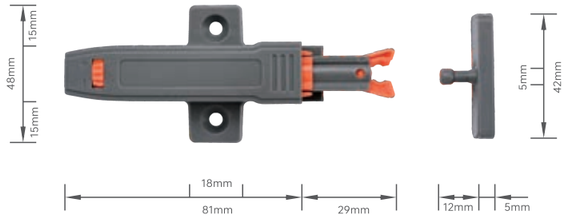

Installation Guide

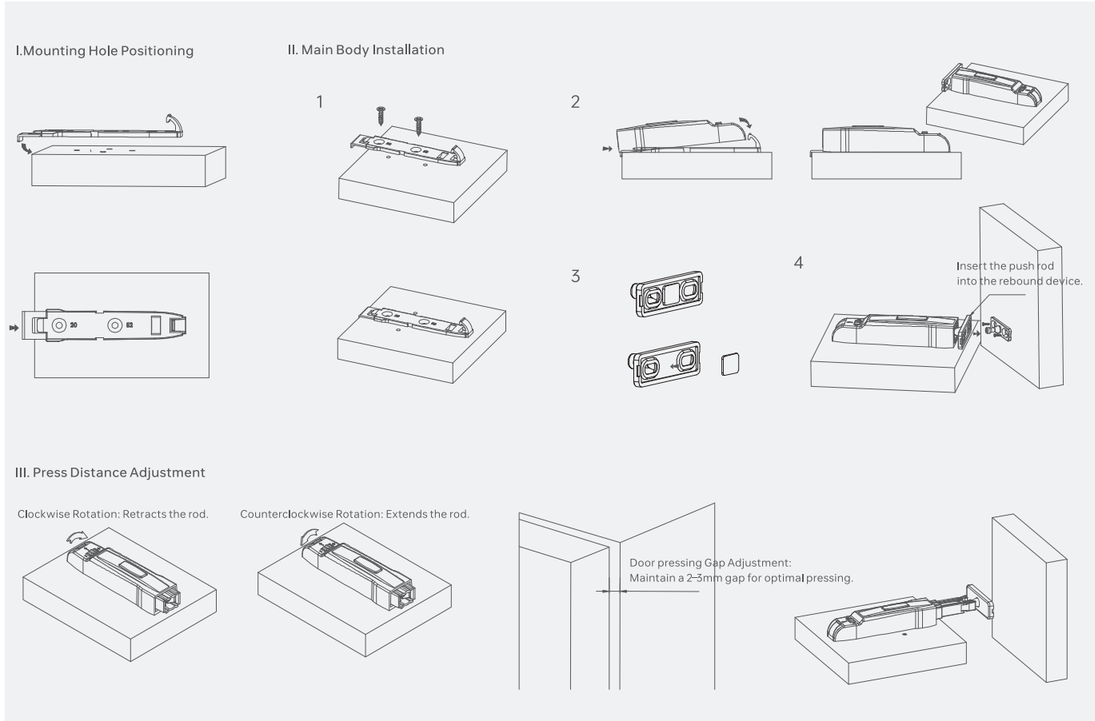

Note: All dimensions are manually measured and may have slight variances. Refer to the physical product for accuracy.

TOUCH LATCH DEVICE

KJ20-052-40N

Product Introduction

Material: Plastic
Color: Grey
Packaging info: 1 piece/poly bag
Outer Box Dimension: 53X27X30cm
Quantity: 500pc/box
Force Options: 40N

Standard Configuration

3M Adhesive Tape

Screw

DETAILS QR CODE

Product information

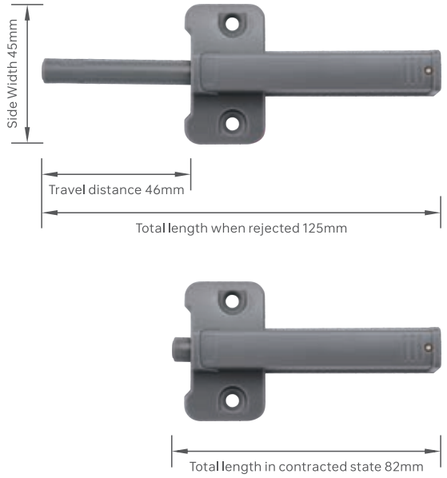

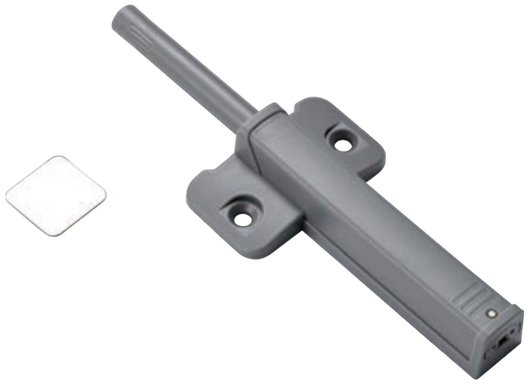

Installation Info

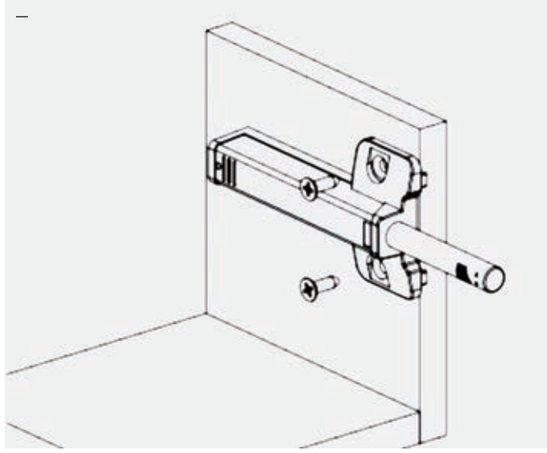

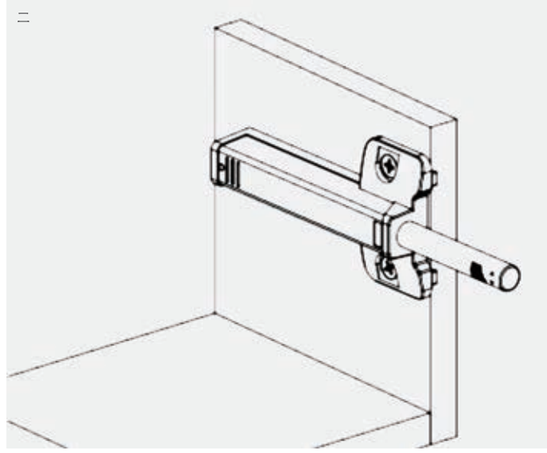

Note: All dimensions are manually measured and may have slight variances. Refer to the physical product for accuracy.

TOUCH LATCH DEVICE

KJ20-022-30N

Product Introduction

Material: Plastic
Colors: Grey/White/Black
Packaging: 1 piece/poly bag
Carton size: 53 × 27 × 30 cm
Quantity: 500 pieces/carton
Force Options: 30N

Standard Configuration

Perforated 3M adhesive patches

Screw

DETAILS QR CODE

Product information

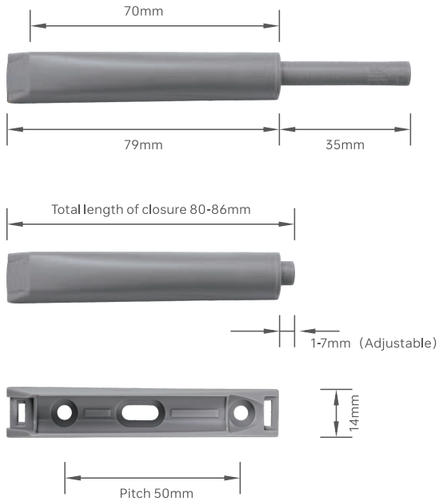

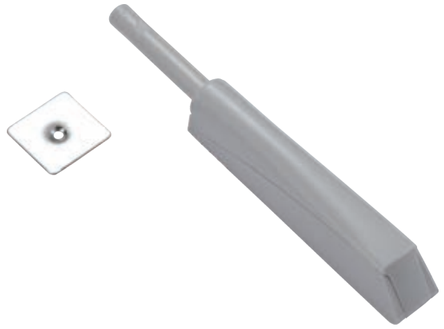

Installation Info

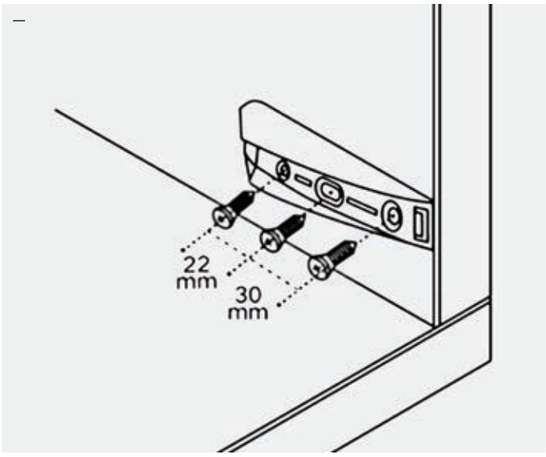

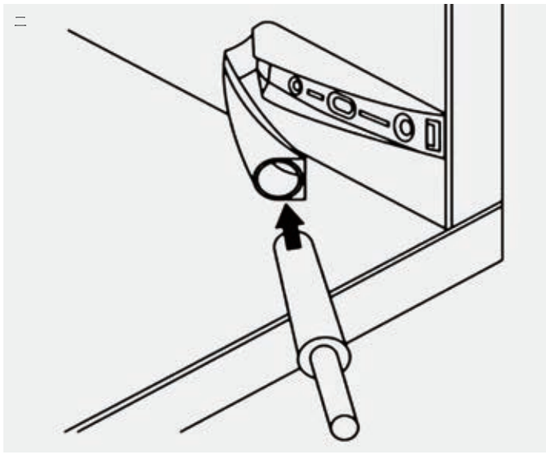

Note: All dimensions are manually measured and may have slight variances. Refer to the physical product for accuracy.

TOUCH LATCH DEVICE

GR-2201-20N

Product Introduction

Material: Plastic
Color: Grey
Packaging: 1 piece/poly bag
Carton size: 53 × 27 × 30 cm
Quantity: 500 pieces/carton
Force Options: 20N

Standard Configuration

3M Adhesive Tape

Thumbtacks

DETAILS QR CODE

Product information

Height: 15mm

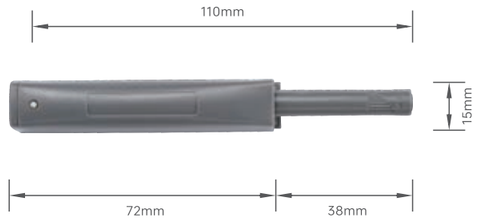

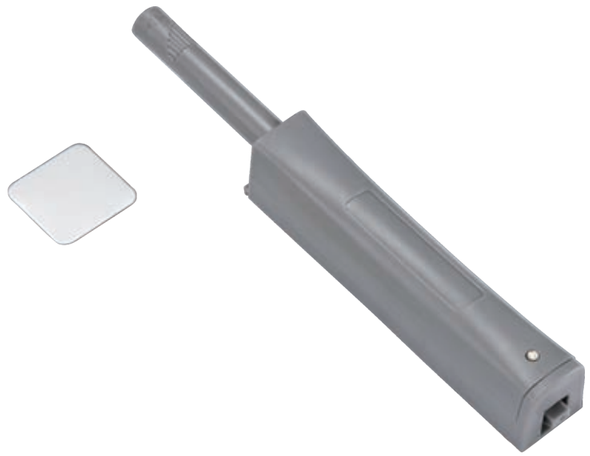

Note: All dimensions are manually measured and may have slight variances. Refer to the physical product for accuracy.